REVISION RECORD			
LTR	ECO NO:	APPROVED:	DATE:

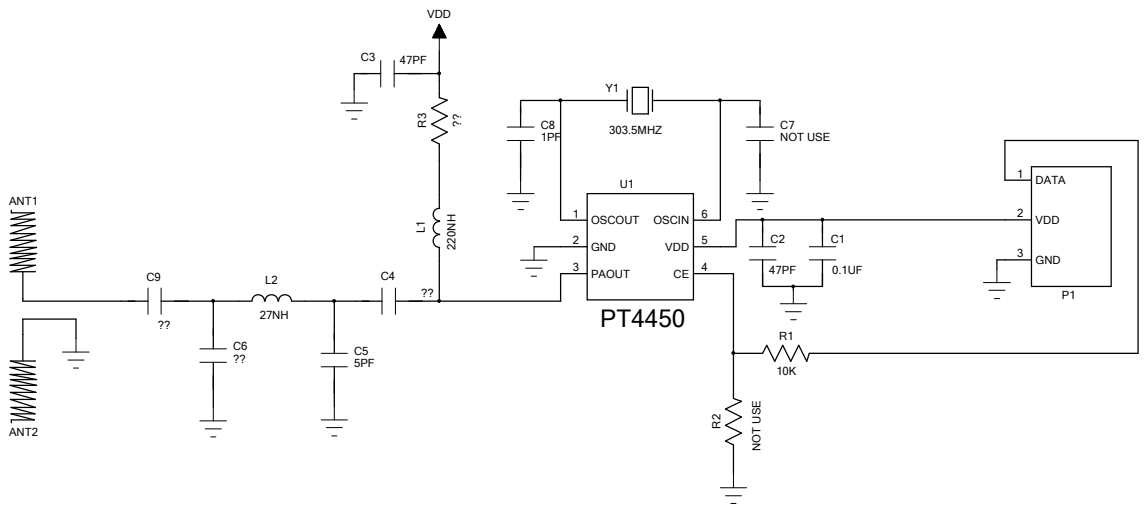

	C9 (PF)	C6(PF)	R3 (ohm)	C7(PF)	C4
HUN32RF	4.7	27	330	1	200PF
URU AT Remote	200	5	1.2K	NOT USE	200PF
W74DL	4.7	27	470	1	18NH

DRAWN: CB CAI	DATED: 3/DEC/09
CHECKED:	DATED:
QUALITY CONTROL:	DATED:
RELEASED:	DATED:

COMPANY: Computime

TITLE: URU TRANSMITTER

CODE:	SIZE:	DRAWING NO:	REV:
	B		V3

SCALE:

SHEET: 1 OF 1