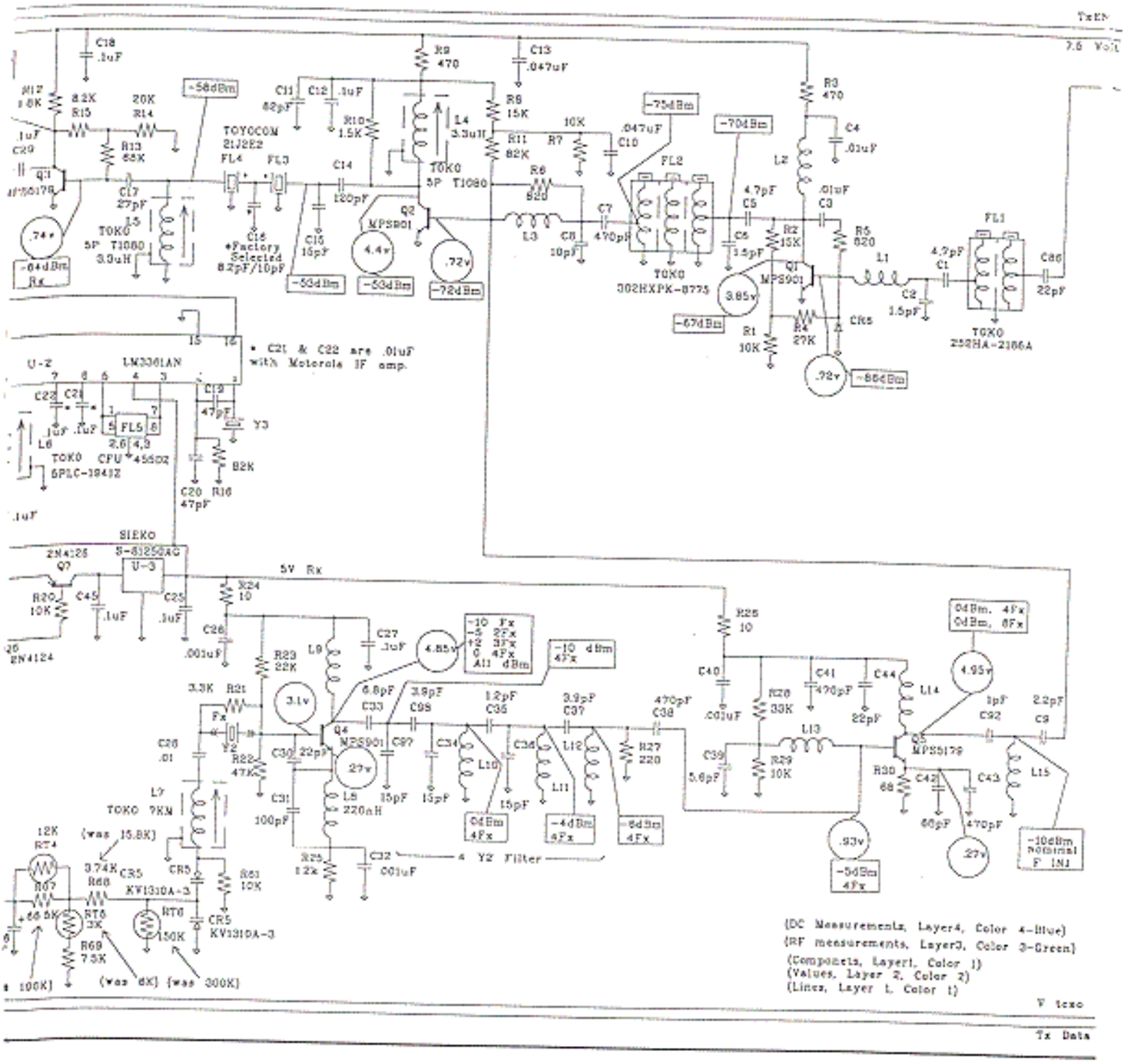
TxEN
7.6 Volt
C18 .1uF
R12 1.8K
R15 8.2K
R14 20K
R13 68K
C29 .1uF
Q1 MPS5179
.74v
-64dBm Rx
-58dBm
TOYOCOM 21J2E2
FL4
FL3
C17 27pF
L5 TOKO 5P T1080 3.3uH
C16 *Factory Selected 8.2pF/10pF
C11 82pF
C12 .1uF
R10 1.5K
C14 120pF
C15 15pF
-53dBm
Q2 MPS901
4.4v
-53dBm
.72v
-72dBm
R9 470
C13 .047uF
L4 3.3uH
TOKO 5P T1080
R8 15K
R11 82K
R7 10K
R6 820
L3
C8 10pF
C7 470pF
C10 .047uF
-75dBm
FL2
TOKO 302HXPK-8775
-70dBm
R3 470
C4 .01uF
L2
C5 4.7pF
C6 1.5pF
C3 .01uF
R2 15K
Q1 MPS901
3.85v
-67dBm
R1 10K
R4 27K
CR5
.92v
-86dBm
R5 820
L1
C1 4.7pF
C2 1.5pF
FL1
TOKO 252HA-2166A
C80 22pF
* C21 & C22 are .01uF with Motorola IF amp.
U-2 LM3361AN
C22 .1uF
C21 .1uF
FL5
2.6
4.9
CFU 455D2
L6 TOKO 6PLC-1943Z
C19 47pF
Y3
R28 10K
C20 47pF
R16 .1uF
SIEKO S-81250AG U-3
2N4126 Q7
R20 10K
C45 .1uF
C25 .1uF
5V Rx
R24 10
C26 .001uF
2N4124
R23 22K
L9
C27 .1uF
4.85v
-10 Fx
-5 2Fx
+2 3Fx
0 4Fx
All dBm
-10 dBm 4Fx
3.1v
3.3K R21
Fx
Y2
C28 .01
R22 47K
C30 22pF
Q4 MPS901
27v
C33 6.8pF
C99 3.9pF
C97
C34 1.2pF
C35
C36 3.9pF
C37
C38 470pF
R27 220
L10
L11
L12
L8 220nH
15pF
15pF
15pF
04Bm 4Fx
-4dBm 4Fx
-6dBm 4Fx
C31 100pF
R25 1.2k
C32 .001uF
Y2 Filter
L7 TOKO 7KN
12K RT4
(was 15.8K)
3.74K R68
CR5 KV1310A-3
R67 68.5K
RT5 3K
R69 7.5K
RT6 150K
CR5 KV1310A-3
R61 10K
(was 8K)
(was 300K)
100K)
R26 10K
C40 .001uF
C41 470pF
C44 22pF
L14
4.95v
04Bm, 4Fx
04Bm, 8Fx
1pF C92
2.2pF C9
C39 5.6pF
R29 10K
L13
Q5 MPS5179
R30 68
C42 60pF
C43 470pF
L15
.93v
-5dBm 4Fx
.27v
-10dBm Nominal F IN1
(DC Measurements, Layer4, Color 4-Blue)
(RF measurements, Layer3, Color 3-Green)
(Components, Layer1, Color 1)
(Values, Layer 2, Color 2)
(Lines, Layer 1, Color 1)
V tcxo
Tx Data

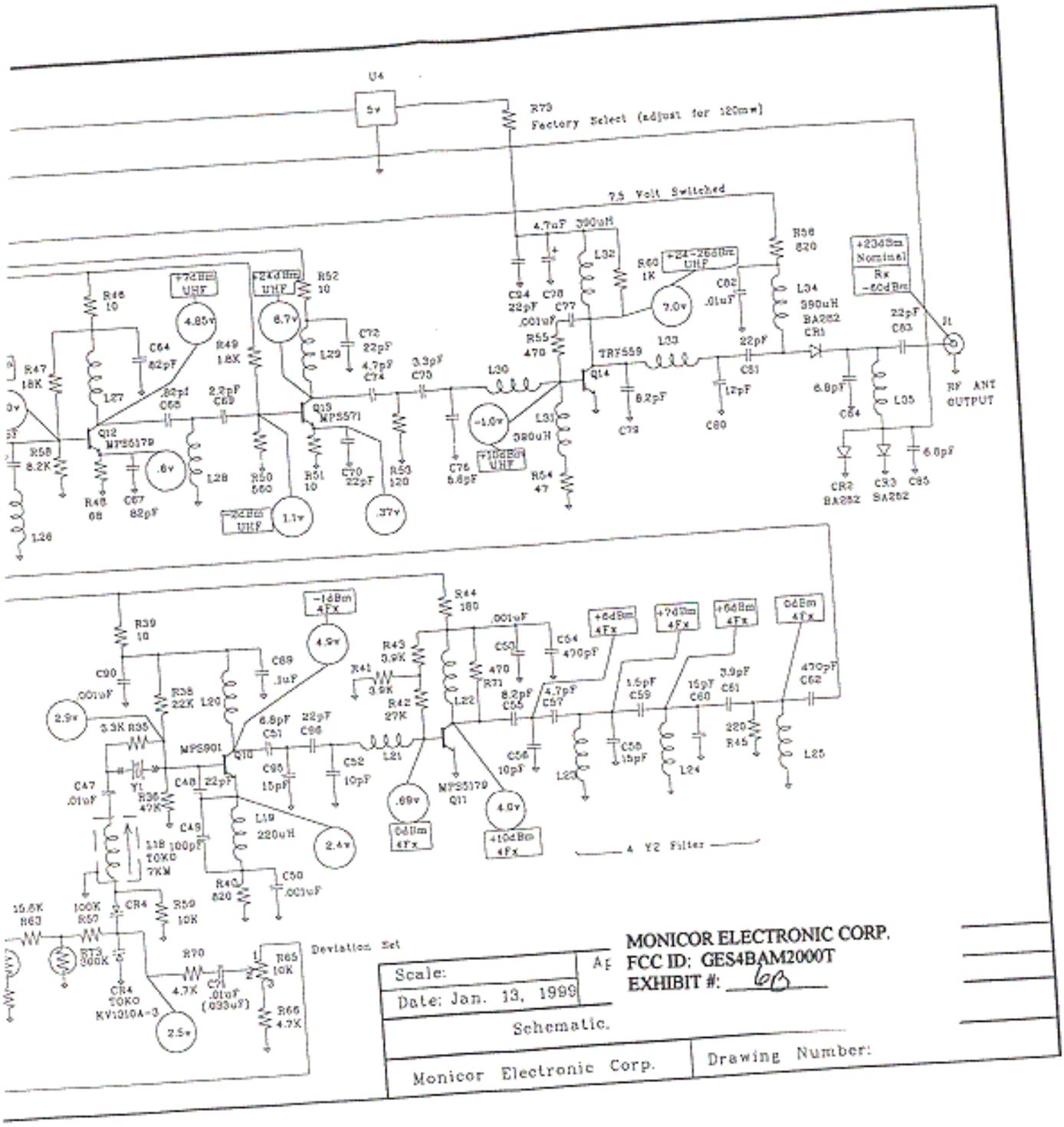
U4
5v
R73
Factory Select (adjust for 120mw)
7.5 Volt Switched
+24-26dBm UHF
+23dBm Nominal Rx -60dBm
RF ANT OUTPUT
J1
Q12 MPS5179
Q13 MPS571
Q14 TRF559
MPS901
Q10
Q11 MPS5179
Deviation Set
4 Y2 Filter
MONICOR ELECTRONIC CORP.
FCC ID: GES4BAM2000T
EXHIBIT #: 6B
Scale:
Date: Jan. 13, 1999
Schematic.
Monicor Electronic Corp.
Drawing Number: