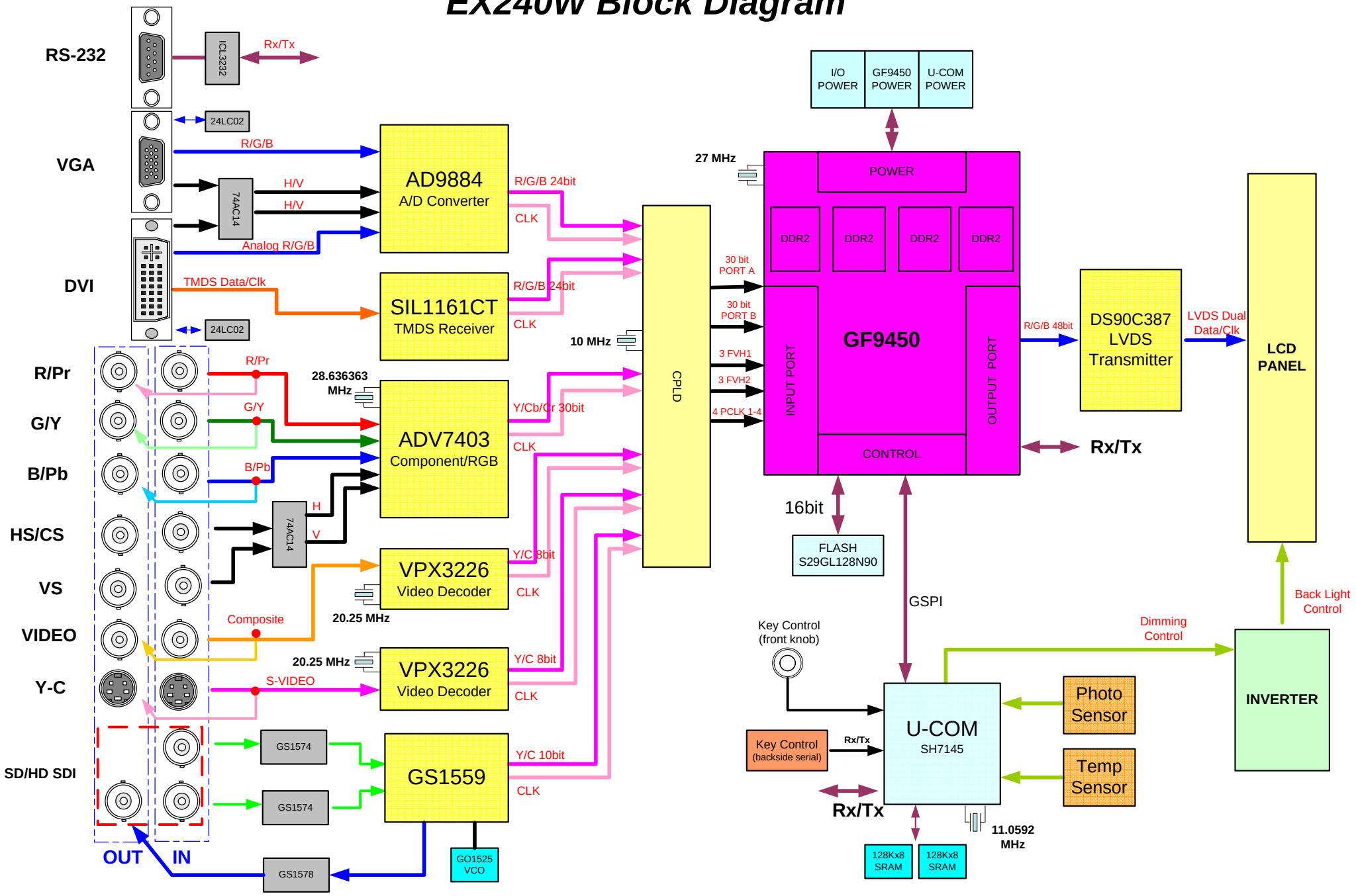EX240W Block Diagram