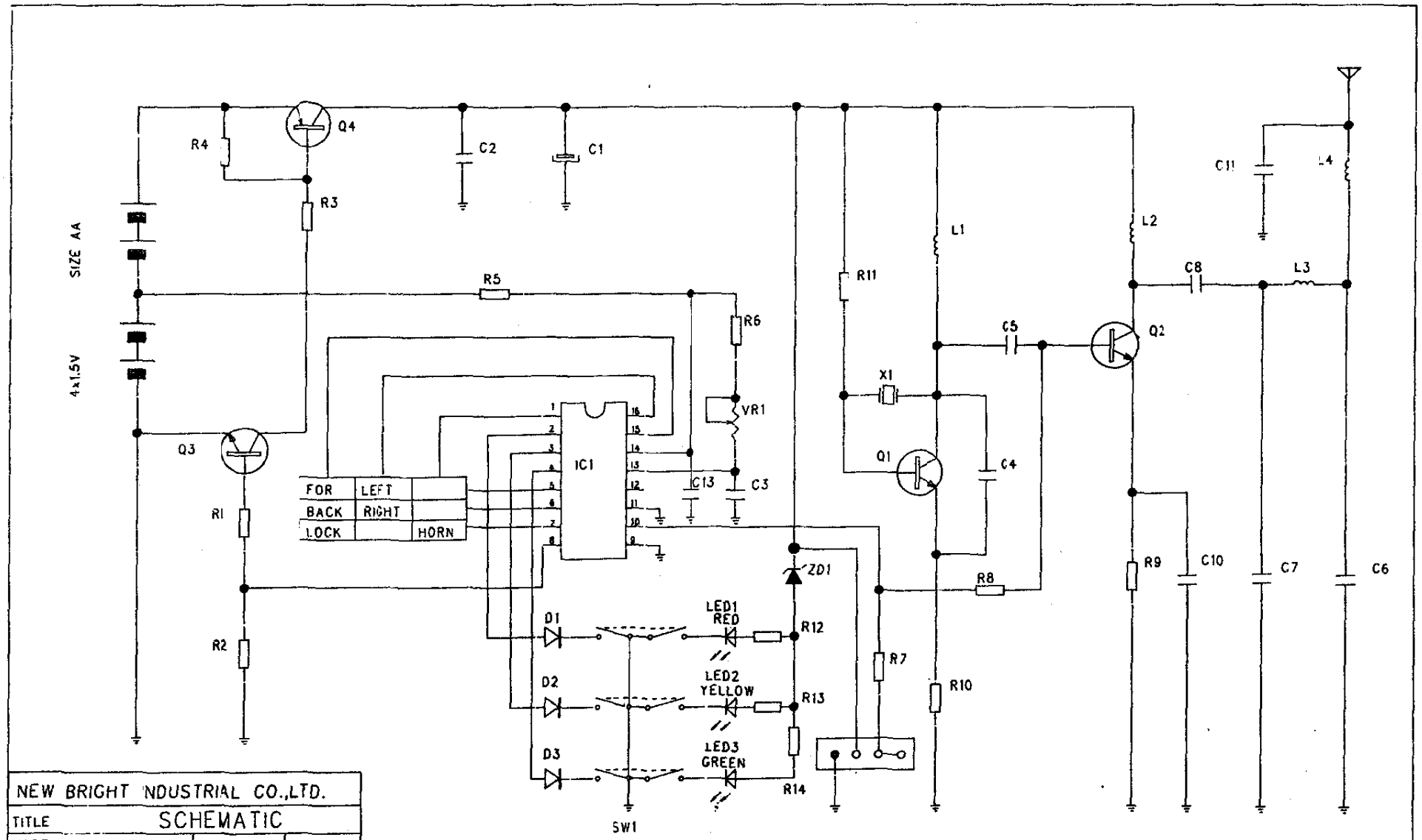

NEW BRIGHT INDUSTRIAL CO.,LTD.			
TITLE	SCHEMATIC		
MODEL : 627H	REV: 1	SCALE:	
DRAWN : 李宝瑞	DATE: 2001-11-29		
DESIGED :	DATE:		
CHECKED :	DATE:		
APPROVED :	DATE:		
DRAWING :			
REMARK :	SHEET OF		

FREQUENCY:27.145MHz

ITEM NO: E908109414