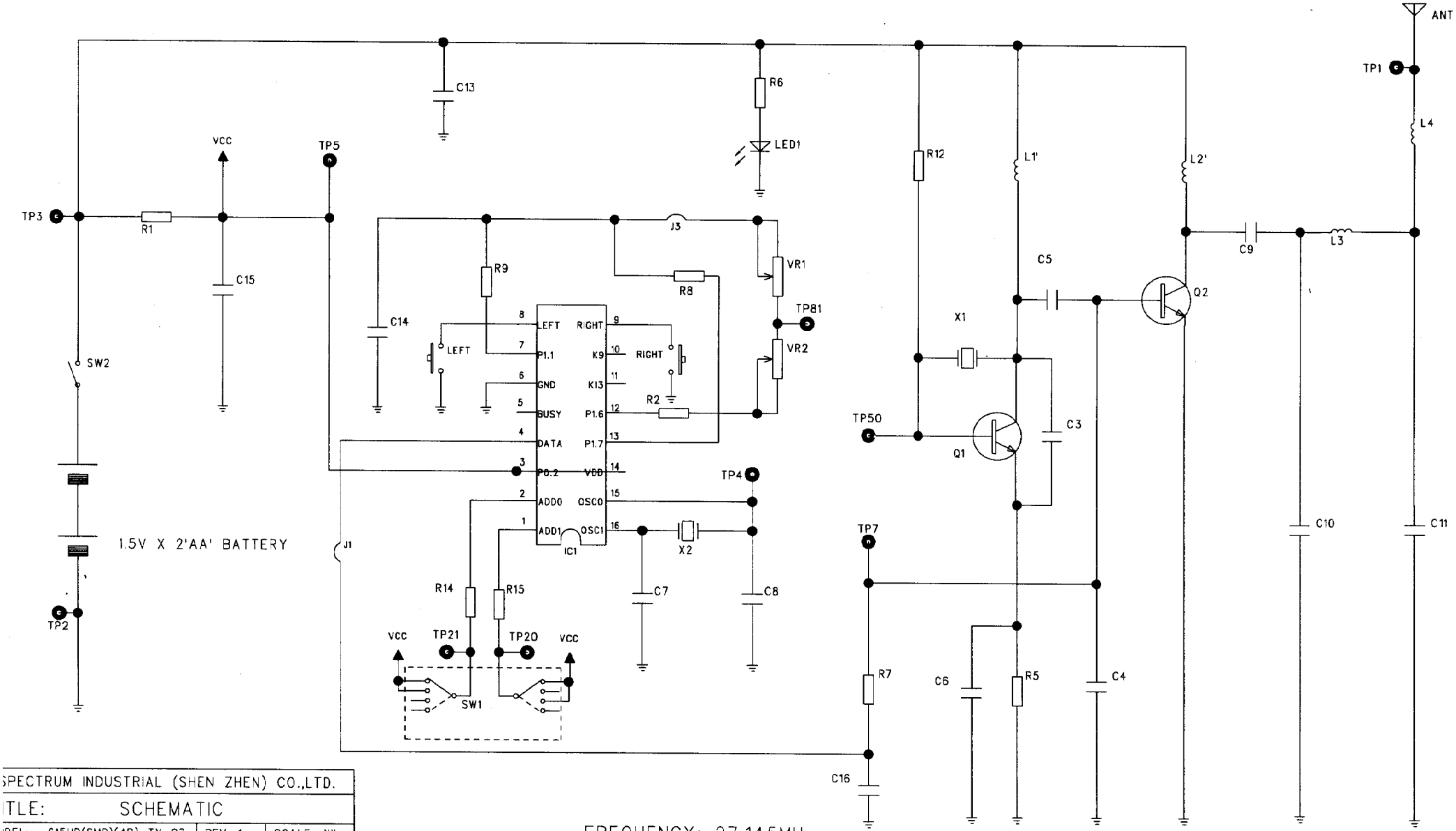

SPECTRUM INDUSTRIAL (SHEN ZHEN) CO.,LTD.		
TITLE: SCHEMATIC		
MODEL: 615HD(SMD)(4B)-TX-27	REV: 1	SCALE: NIL
DRAWN: L.P	DATE: MAR-3-2009	
DESIGED: L.P	DATE: MAR-3-2009	
CHECKED:	DATE:	
APPROVED:	DATE: 12 MAR 2009	
DRAWING:		
REMARK: 615HD(SMD)(4B) REV.1	SHEET 1 OF 1	

FREQUENCY: 27.145MHz

ITEM NO: E908126351