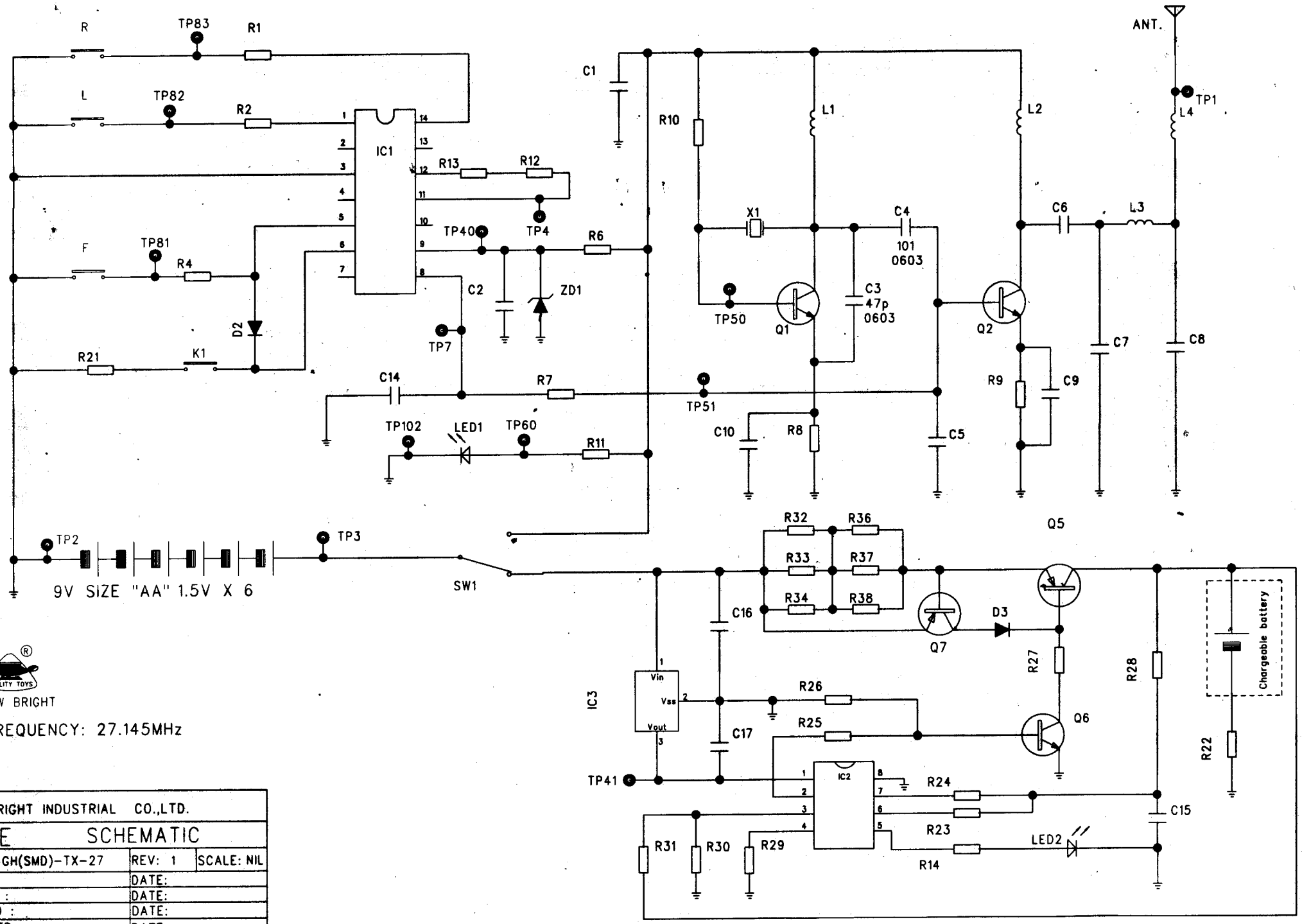

NEW BRIGHT

FREQUENCY: 27.145MHz

NEW BRIGHT INDUSTRIAL CO.,LTD.		
TITLE SCHEMATIC		
MODEL: 4GH(SMD)-TX-27	REV: 1	SCALE: NIL
DRAWN :	DATE:	
DESIGED :	DATE:	
CHECKED :	DATE:	
APPROVED :	DATE:	
DRAWING No.:		
REMARK: FOR PCB.4GH(SMD) REV.1	SHEET 1 OF 1	