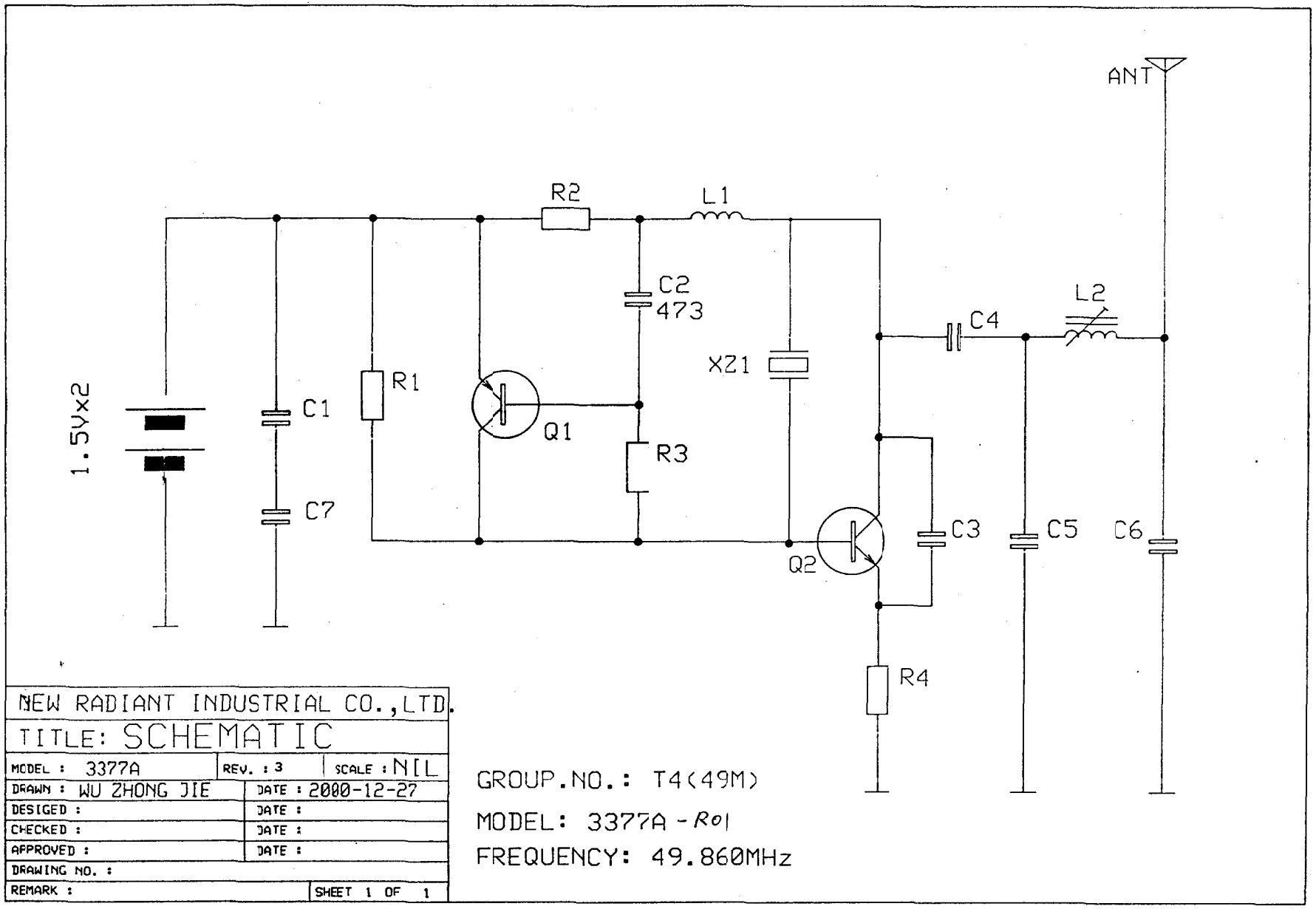# FCC ID: G6D3377A-R01