Rev	Description	Date

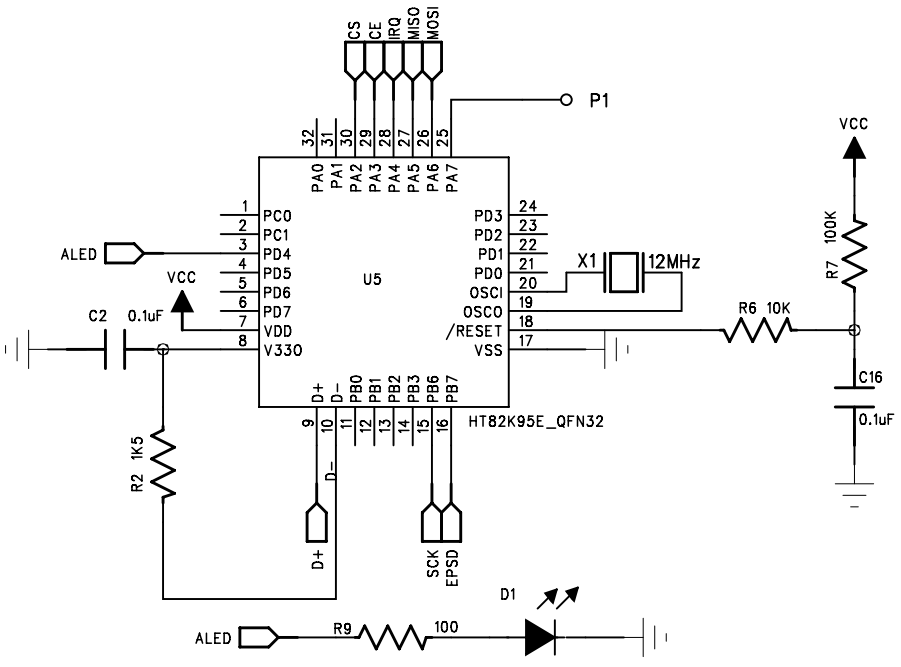

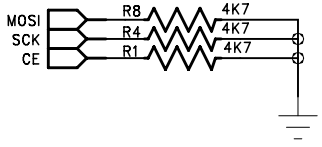

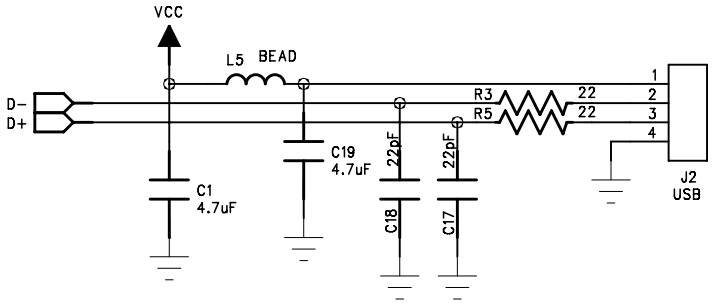

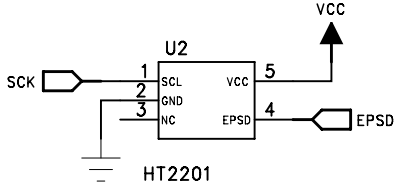

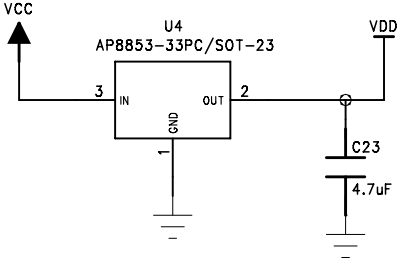

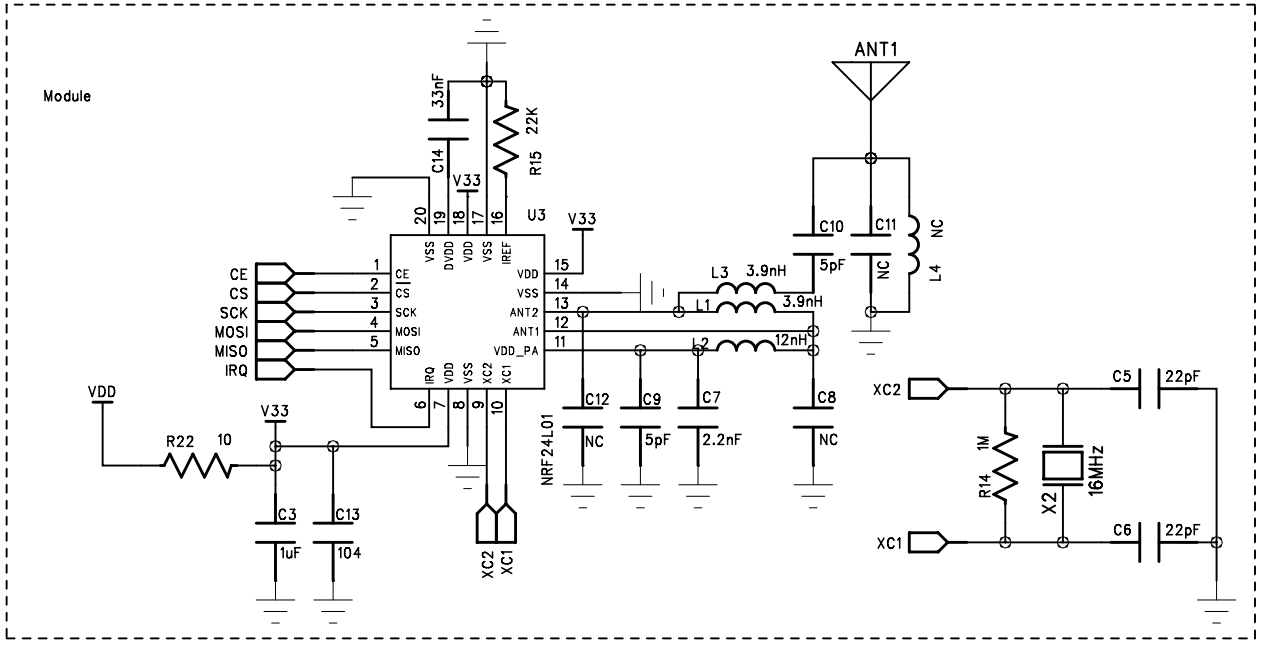

R1=NC FOR VISTA ENABLE,R1=4.7K FOR VISTA DISABLE

R4=NC FOR 3 BUTTOM,R4=4.7K FOR 5 BUTTOM

R8=NC FOR COMBO,R8=4.7K FOR MOUSE ONLY