FCC ID:FSUGJ0001

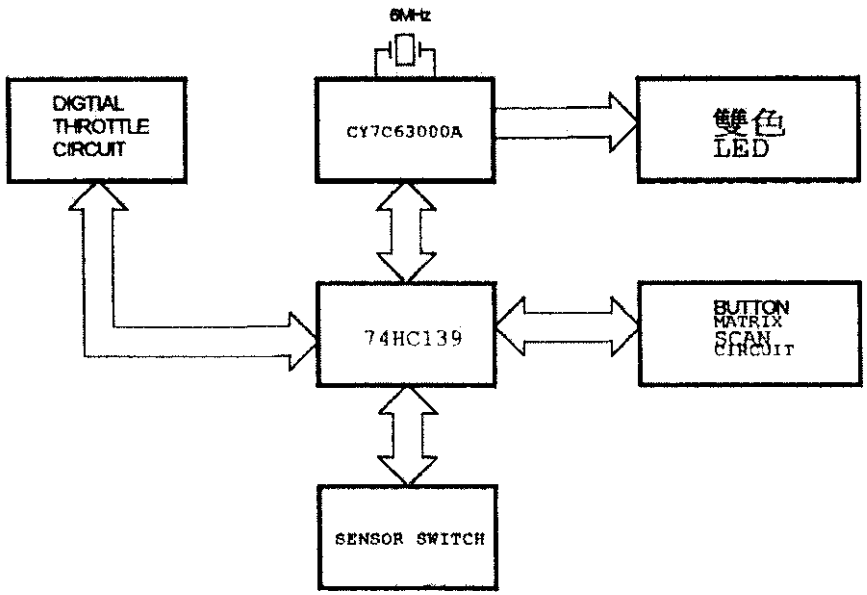

KYE SYSTEM CORP		
Size A	Document Number GESTURE USB BLOCK	Rev
Date: Wednesday, July 07, 1999	Sheet 1 of 1	

EXHIBIT