NOTES

1. ALL PARAMETERS ARE MEASURED AT VCC = 3.5V AND T = 25 C UNLESS NOTED
2. R18,C9 MAY NOT BE NEEDED

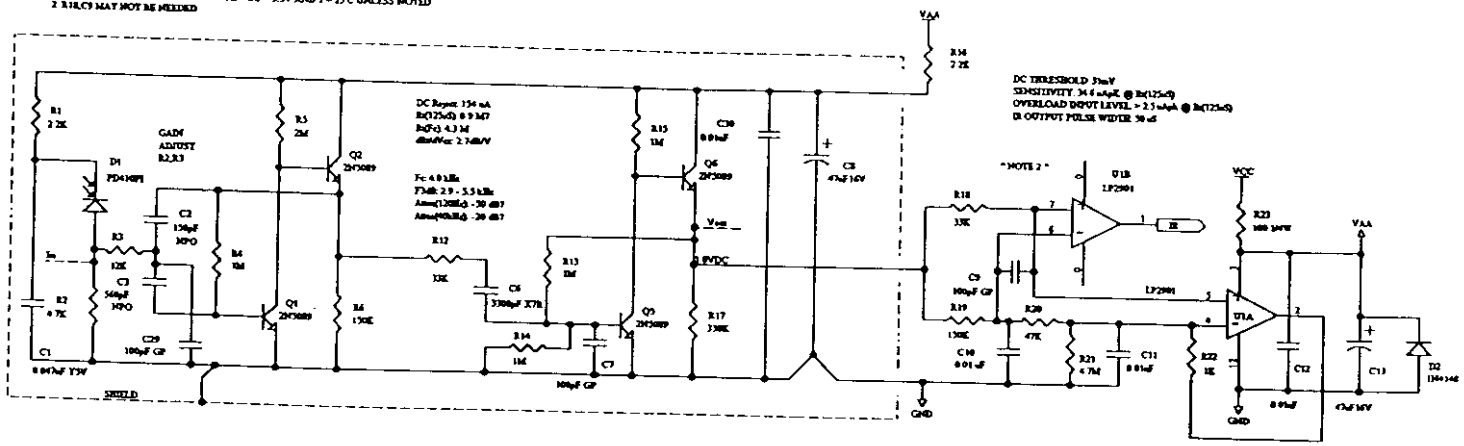

IR AMPLIFIER AND FILTER

PULSE DETECTOR

WITH ADAPTIVE THRESHOLD

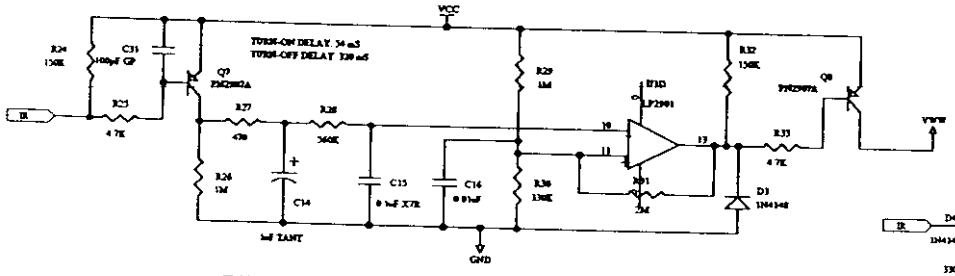

INTEGRATING CARRIER DETECT

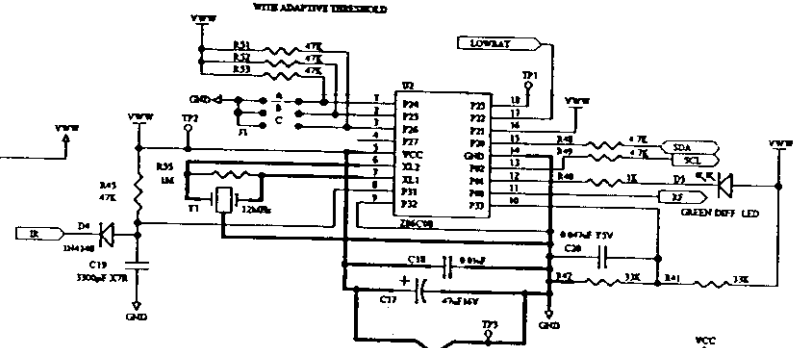

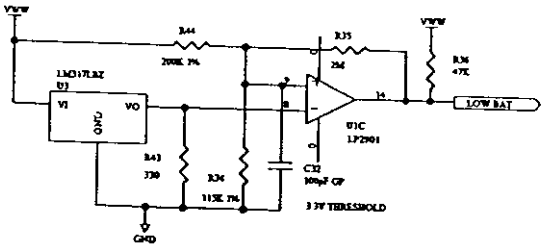

LOW BATTERY DETECT

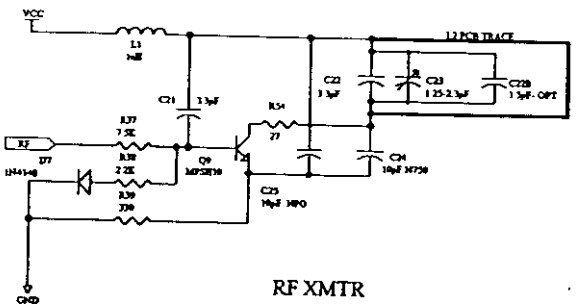

RF XMTR

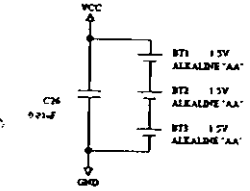

BT1-BT3 C1-C3,C8-C24,C29-C32 D1-D5,D7 L1 Q1-Q2,Q5-Q9 R1-R4,R12-R45,R47-R49,R51-R55 U1-U4 T1

SCO 5233 97NOV11 CHANGE C18, C11 VALUES
PCB 30-3036 REV B

RMTA INC CONFIDENTIAL		
Title: IRF WIRELESS IR RECEIVER		
Size	Assembly Number: 02-3036	REV
	Date of Revision: FEBRUARY 26, 1998	
Tabloid	Document Number: 3036LSCH	10
Sheet 1 of 1	Printed on: 26-Feb-1998	