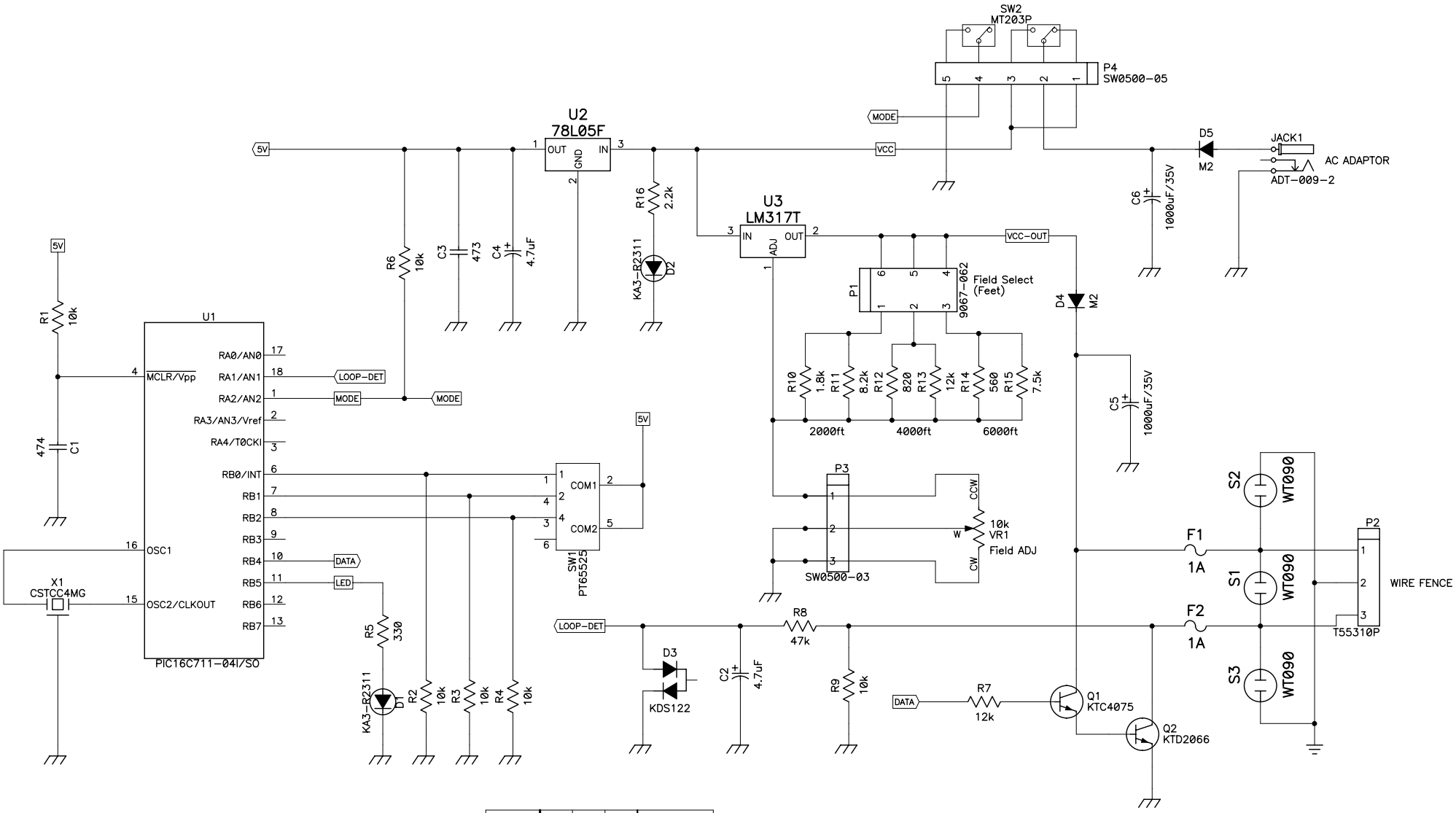

Mode
H : Pager + Shock
L : Shock

Dial No.	1	2	3	Shock Level
0				1
1	ON			2
2		ON		3
3	ON	ON		4
4			ON	5
5	ON		ON	(6)

Title	e-Fence TX	
Size A3	Number	Rev
Date		Drawn by
Filename		Sheet of