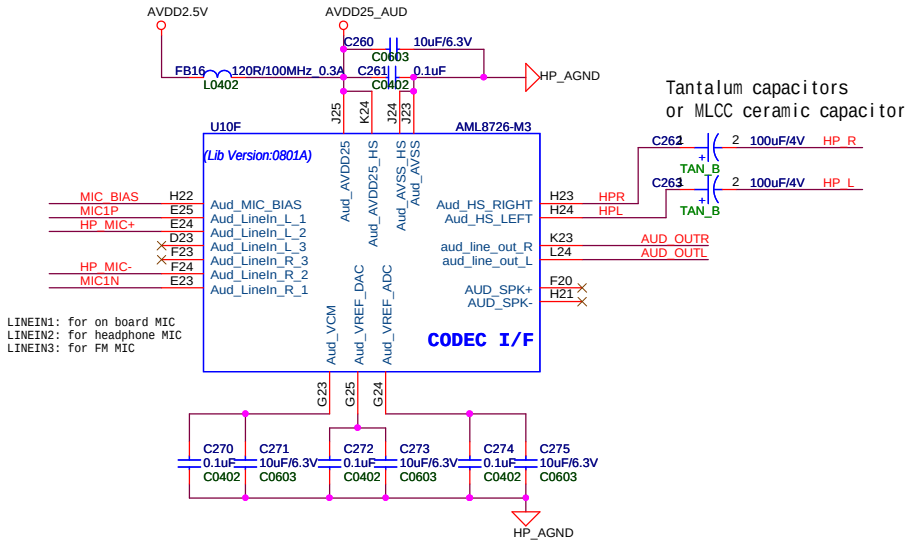

LINEIN1: for on board MIC
LINEIN2: for headphone MIC
LINEIN3: for FM MIC

Tantalum capacitors
or MLCC ceramic capacitor

C262 2 100uF/4V HP_R
C263 2 100uF/4V HP_L
TAN_B

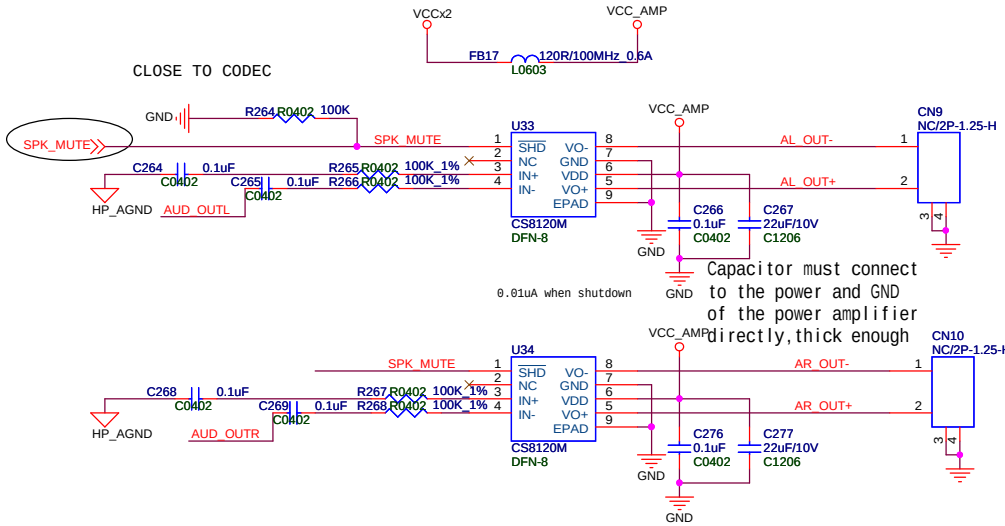

Differential MIC layout notes:
Amplifier placed close to the MIC, MIC1N/MIC1P close alignment, differential line package HP_AGND;
mic # 1 pin, filter capacitor, MIC1N coupling capacitor single-point connection

Headphone MIC

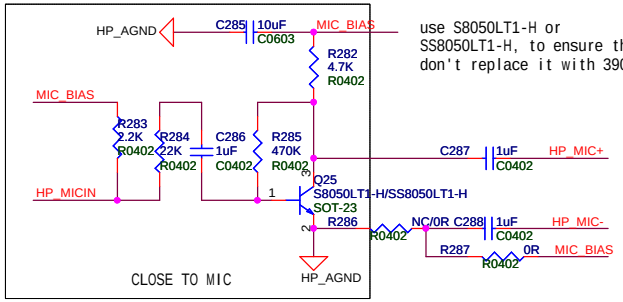

use S8050LT1-H or
SS8050LT1-H, to ensure that Beta at 200-350.
don't replace it with 3904/9014.

Headphone MIC

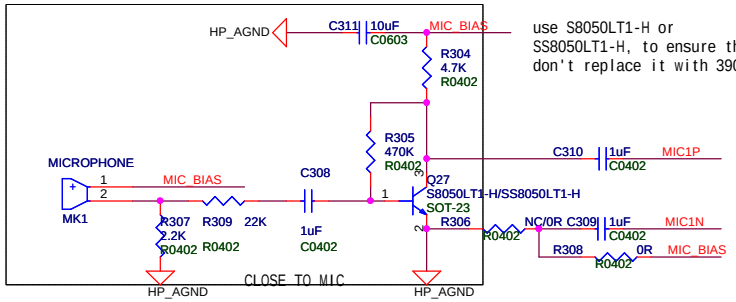

use S8050LT1-H or
SS8050LT1-H, to ensure that Beta at 200-350.
don't replace it with 3904/9014.

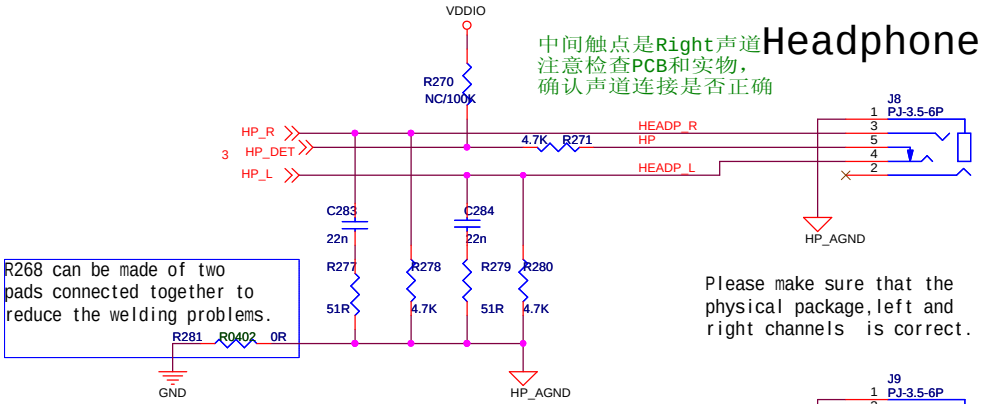

中间触点是Right声道
注意检查PCB和实物，
确认声道连接是否正确

Headphone

R268 can be made of two pads connected together to reduce the welding problems.

Please make sure that the physical package, left and right channels is correct.

place R268 close to the headphone jack, to reduce the affect from CVBS, and improved ESD protection

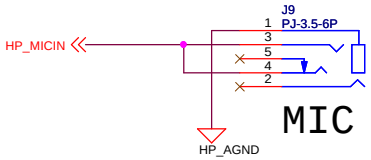

MIC

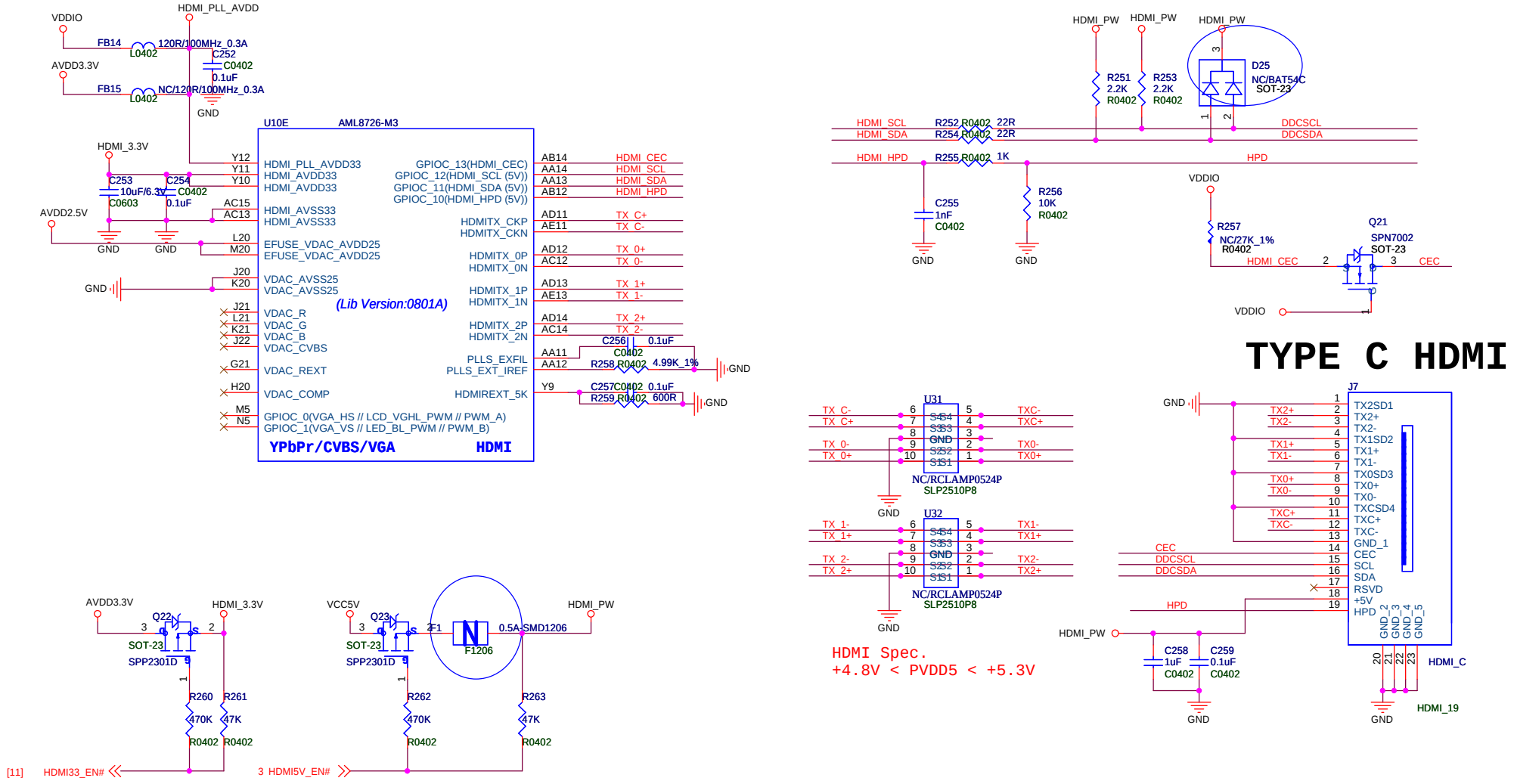
TYPE C HDMI
U10E AML8726-M3
(Lib Version:0801A)
YPbPr/CVBS/VGA
HDMI
HDMI_PLL_AVDD33
HDMI_AVDD33
HDMI_AVSS33
EFUSE_VDAC_AVDD25
VDAC_AVSS25
VDAC_R
VDAC_G
VDAC_B
VDAC_CVBS
VDAC_REXT
VDAC_COMP
GPIOC_0(VGA_HS // LCD_VGHL_PWM // PWM_A)
GPIOC_1(VGA_VS // LED_BL_PWM // PWM_B)
GPIOC_13(HDMI_CEC)
GPIOC_12(HDMI_SCL (5V))
GPIOC_11(HDMI_SDA (5V))
GPIOC_10(HDMI_HPD (5V))
HDMITX_CKP
HDMITX_CKN
HDMITX_0P
HDMITX_0N
HDMITX_1P
HDMITX_1N
HDMITX_2P
HDMITX_2N
PLLS_EXFIL
PLLS_EXT_IREF
HDMIREXT_5K
HDMI_CEC
HDMI_SCL
HDMI_SDA
HDMI_HPD
TX_C+
TX_C-
TX_0+
TX_0-
TX_1+
TX_1-
TX_2+
TX_2-
R258 R0402 4.99K_1%
R259 R0402 600R
C256 0.1uF C0402
C257 C0402 0.1uF
FB14 L0402 120R/100MHz_0.3A
FB15 L0402 NC/120R/100MHz_0.3A
C252 C0402 0.1uF
C253 C0603 10uF/6.3V
C254 C0402 0.1uF
VDDIO
AVDD3.3V
AVDD2.5V
HDMI_PLL_AVDD
HDMI_3.3V
GND
HDMI_PW
R251 2.2K R0402
R253 2.2K R0402
D25 NC/BAT54C SOT-23
R252 R0402 22R
R254 R0402 22R
R255 R0402 1K
DDCSCL
DDCSDA
HPD
C255 1nF C0402
R256 10K R0402
R257 NC/27K_1% R0402
Q21 SPN7002 SOT-23
CEC
U31
U32
NC/RCLAMP0524P
SLP2510P8
TXC-
TXC+
TX0-
TX0+
TX1-
TX1+
TX2-
TX2+
J7
TX2SD1
TX2+
TX2-
TX1SD2
TX1+
TX1-
TX0SD3
TX0+
TX0-
TXCSD4
TXC+
TXC-
GND_1
CEC
SCL
SDA
RSVD
+5V
HPD
GND_2
GND_3
GND_4
GND_5
HDMI_C
HDMI_19
C258 1uF C0402
C259 0.1uF C0402
HDMI Spec.
+4.8V < PVDD5 < +5.3V
Q22 SPP2301D SOT-23
Q23 SPP2301D SOT-23
VCC5V
F1 F1206 0.5A SMD1206
R260 470K R0402
R261 47K R0402
R262 470K R0402
R263 47K R0402
[11] HDMI33_EN#
3 HDMI5V_EN#

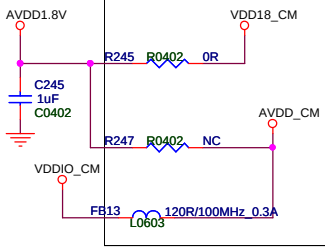

Low-resolution cameras such as the OV9650
AVDD is 2.5V, core voltage is 1.8V.

High-resolution cameras such as the OV2665
AVDD is 2.8V, the core voltage is generated
by the internal LDO

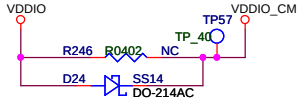

Some camera models require IO voltage <AVDD +0.3
Otherwise use 0R resistor to replace the diode

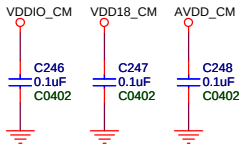

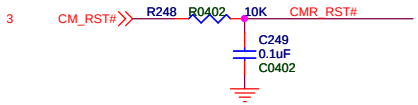

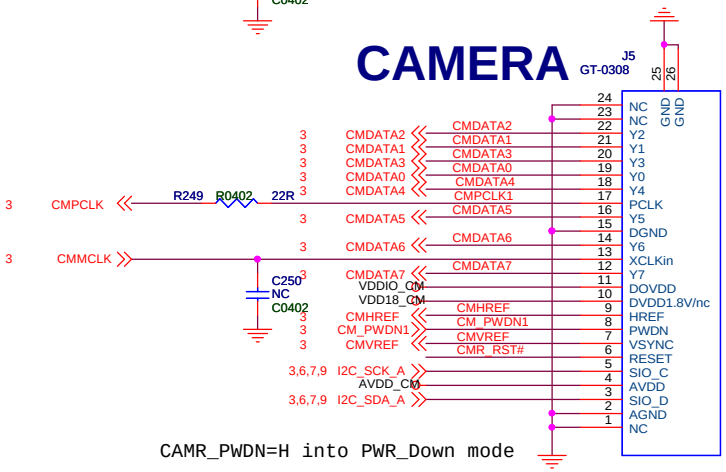

H powerdown,
L active

CAMR_PWDN=H into PWR_Down mode

Note to confirm the camera model match the structure

Front Camera
Galaxycore camera:
200W pixels/30fps

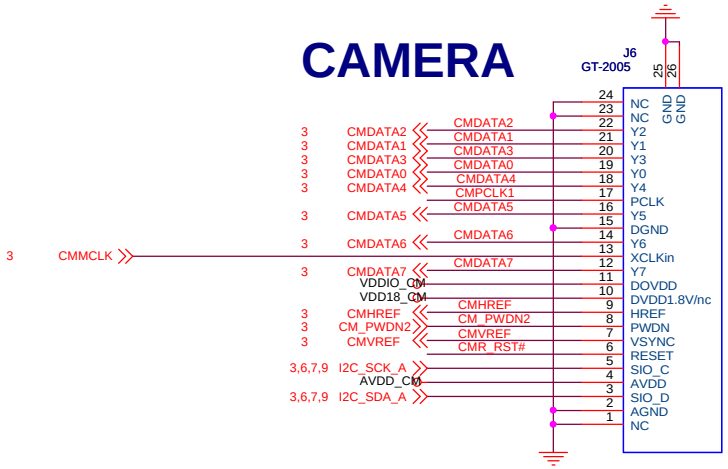

H powerdown,
L active

Back Camera
Galaxycore
camera:
200W pixels/30fps

Camera: Ling Industrial Co., Ltd. Guangzhou
DC-100628A:200W pixels/
30fps for SVGA&15fps for UXGA.
Note that both camera FPC interface definition is different.

Note: The direction of the camera imaging
and LCD screen must be horizontal direction,
or 180 °, otherwise the software can not be
adjusted.

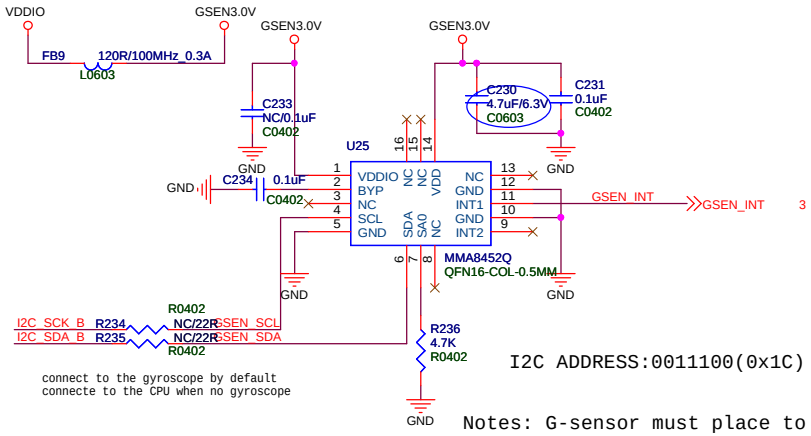

I2C ADDRESS:0011100(0x1C)

Notes: G-sensor must place to the center of MID.

3-Axis G Sensor

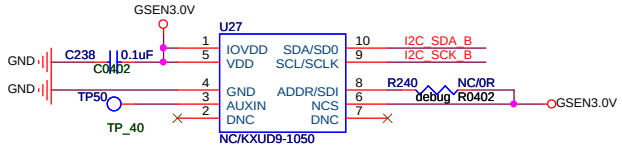

NCS=1,I2C mode;
NCS=0,SPI mode.

I2C ADDRESS
ADDR/SDI=0, 0011000(0x18)
ADDR/SDI=1, 0111001(0x19)

Kionix +/-2g Tri-axis Digital accelerometer

Magnetic Sensor

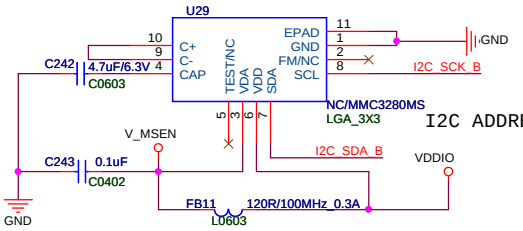

I2C ADDRESS:0110000(0x30)

keep away from speakers, motors, metal dome buttons,
tin and other materials with great impact on the field,
>20mm away from Speaker, MOTOR,
>20mm away from large current Power line,(such as VBAT,VCCX,VCC1.2V, VCC1.8V).
place on the board side, for the magnetic field environment is better than the board.

GYROSCOPE

ALL Sensor Pin1 point to the lower left cornerof the horizontal screen (front direction)

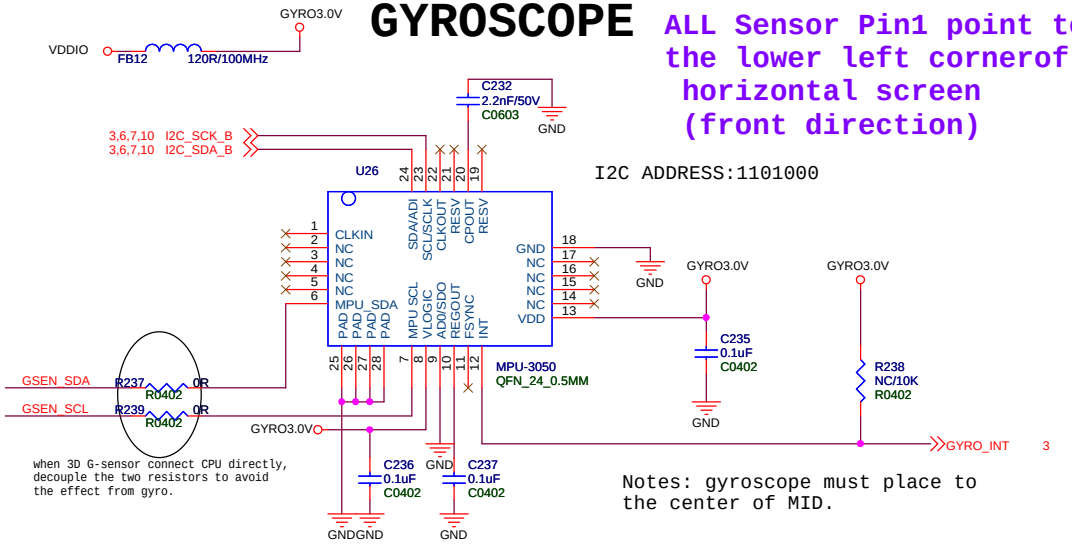

I2C ADDRESS:1101000

Notes: gyroscope must place to the center of MID.

Magnetic Sensor & 3D G-sensor

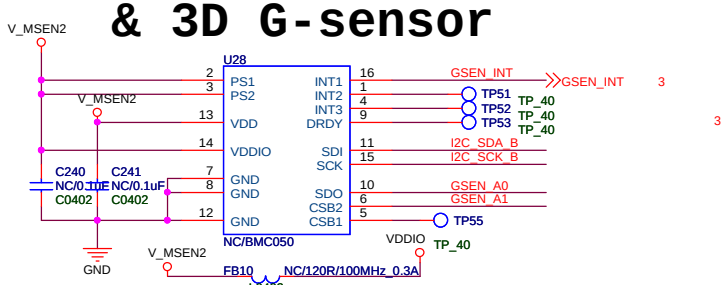

Table 98: BMC050 I²C addresses

CSB2 pin	SDO pin	Accelerometer part I²C address	Magnetometer part I²C address
GND	GND	0x18	0x10
GND	VDDIO	0x19	0x11
VDDIO	GND	0x18	0x12
VDDIO	VDDIO	0x19	0x13

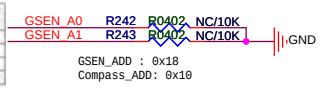

GSEN_ADD : 0x18
Compass_ADD: 0x10

Vibrator

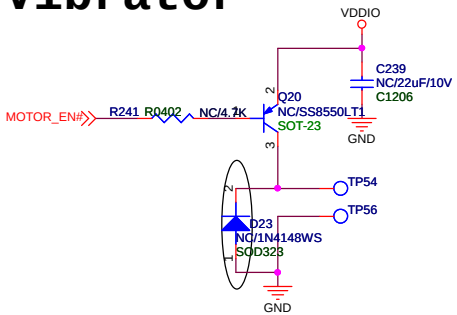

OPTIONAL

2-Axis G Sensor for option

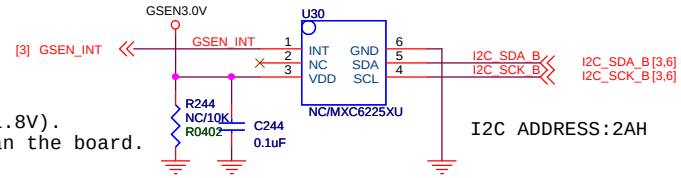

I2C ADDRESS:2AH

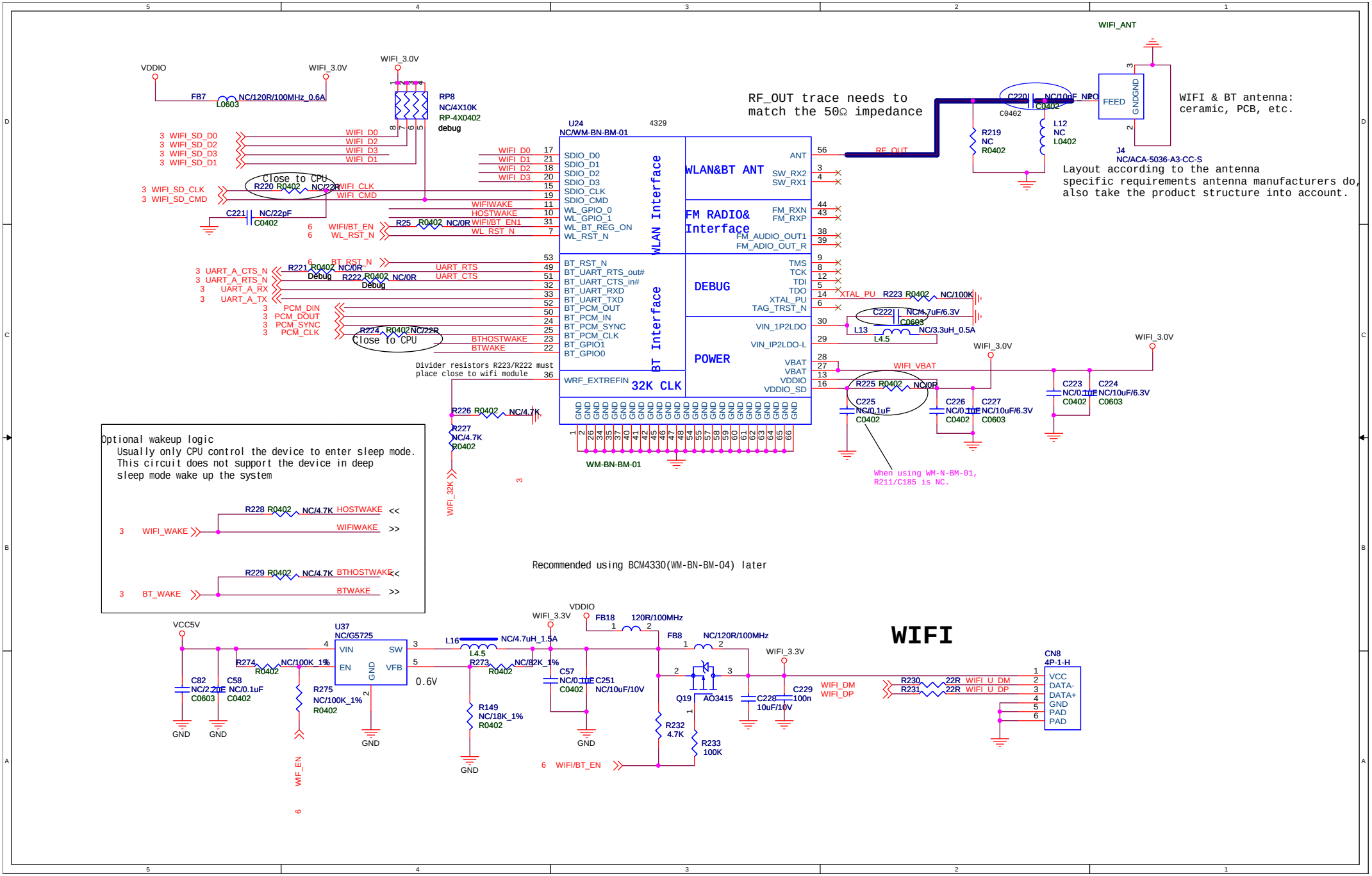
WIFI
RF_OUT trace needs to match the 50Ω impedance
WIFI & BT antenna: ceramic, PCB, etc.
Layout according to the antenna specific requirements antenna manufacturers do, also take the product structure into account.
U24
NC/WM-BN-BM-01
WLAN Interface
BT Interface
WLAN&BT ANT
FM RADIO& Interface
DEBUG
POWER
32K CLK
WM-BN-BM-01
J4
NC/ACA-5036-A3-CC-S
CN8
4P-1-H
U37
NC/G5725
Optional wakeup logic
Usually only CPU control the device to enter sleep mode.
This circuit does not support the device in deep sleep mode wake up the system
Recommended using BCM4330(WM-BN-BM-04) later
Divider resistors R223/R222 must place close to wifi module
When using WM-N-BM-01, R211/C185 is NC.
Close to CPU
0.6V

ADC KEY

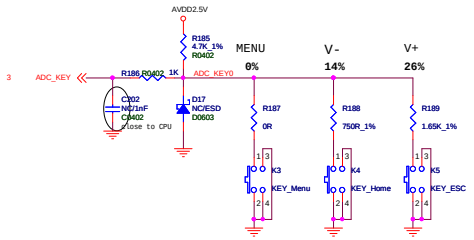

Button labeled corresponding function

Please follow below resistor value

KEY	1	2	3	4	5	6	7	8
Value	0%	14%	26%	38%	50%	62%	75%	87%
Resister		750R 1%	910R 1%	1.2K 1%	1.8K 1%	3K 1%	6.2K 1%	13K 1%
Pull-up:4.7K_1%,MAX 8 ADC KEYS								

when using less keys,
delete right side buttons.
Only the left key works when
pressing multiple keys imultaneously
key like "OK", and other
special keys should be placed to the right side

USB HUB

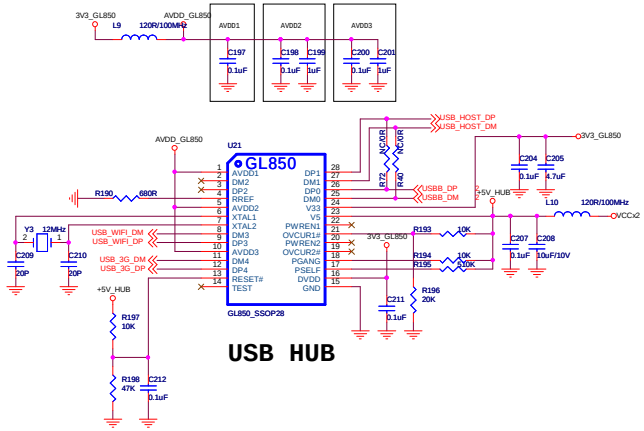

USB HOST

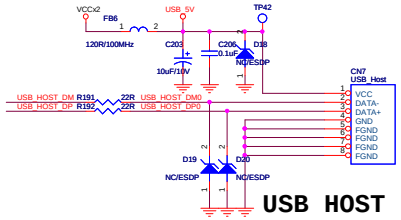

USB OTG

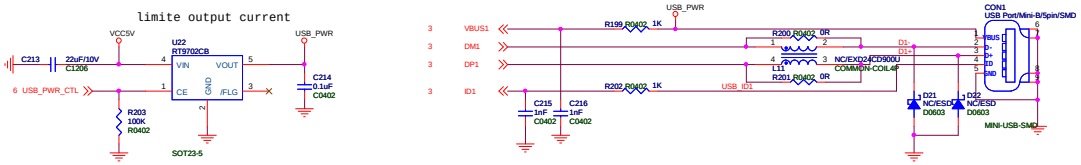

TF CARD

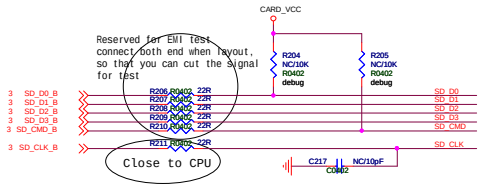

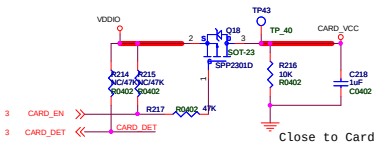

Check pcb footprint carefully

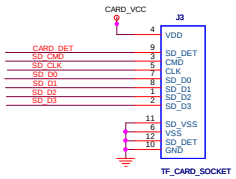

IR

Not recommended to connect to VDDIO_AO,
it will increase suspend power consumption.

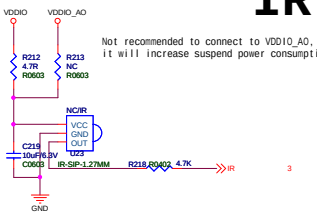

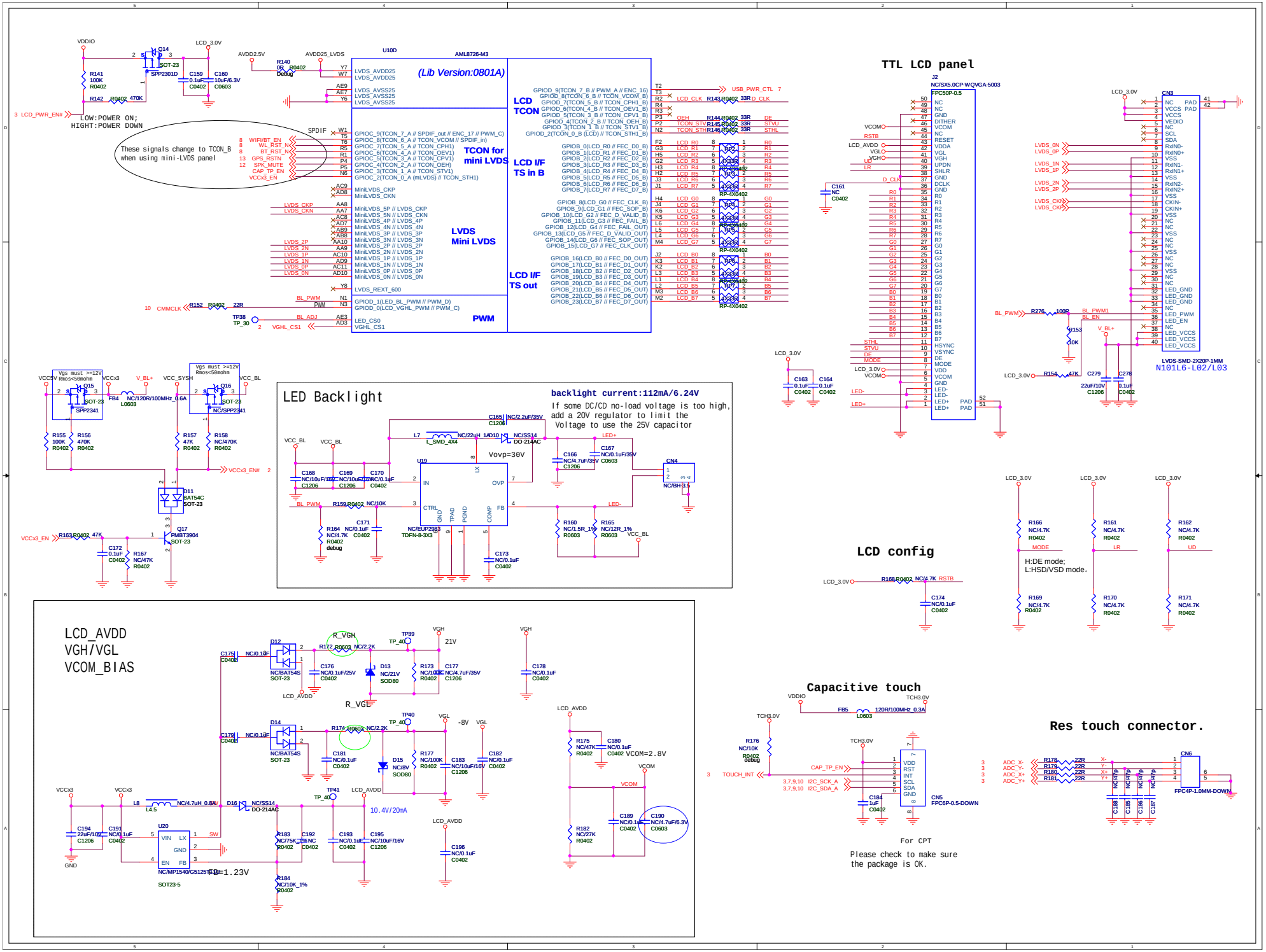
U10D
AML8726-M3
(Lib Version:0801A)
LCD TCON
TCON for mini LVDS
LCD I/F TS in B
LVDS Mini LVDS
LCD I/F TS out
PWM
LOW:POWER ON;
HIGHT:POWER DOWN
These signals change to TCON_B when using mini-LVDS panel
TTL LCD panel
J2
NC/SX5.0CP-WQVGA-5003
FPC50P-0.5
CN3
LVDS-SMD-2X20P-1MM
N101L6-L02/L03
LED Backlight
backlight current:112mA/6.24V
If some DC/CD no-load voltage is too high, add a 20V regulator to limit the Voltage to use the 25V capacitor
Vovp=30V
CN4
NC/BH-3.5
LCD_AVDD
VGH/VGL
VCOM_BIAS
R_VGH
R_VGL
21V
-8V
VCOM=2.8V
10.4V/20mA
FB=1.23V
LCD config
H:DE mode;
L:HSD/VSD mode。
Capacitive touch
CN5
FPC6P-0.5-DOWN
Res touch connector.
CN6
FPC4P-1.0MM-DOWN
For CPT
Please check to make sure the package is OK.

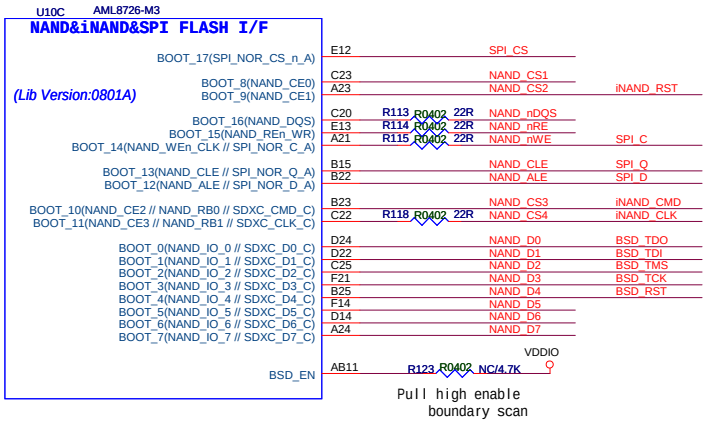

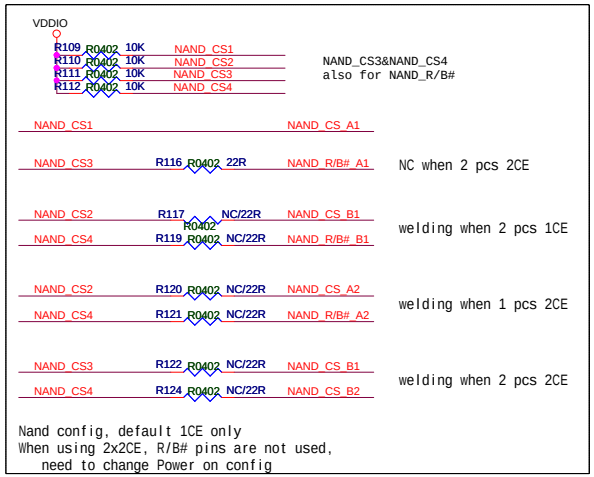

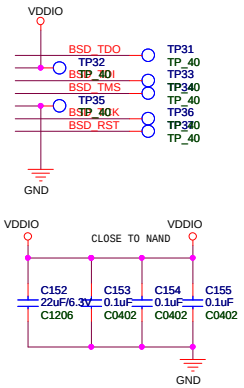

INAND

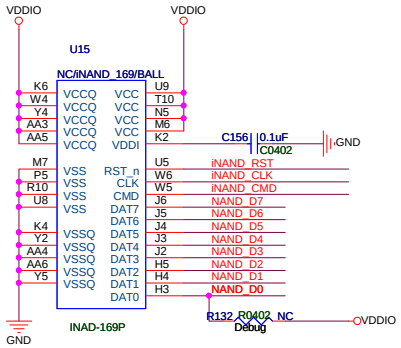

Power On Config place to the easy welding place where can be weld when open the shell.

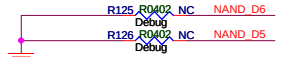

NAND_D6 NAND_D5
1 1 Boot from SD_B

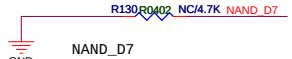

NAND_D7
1 ROM BOOT (NAND/iNand/SD_card)
0 Boot From SPI_A

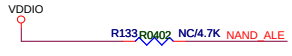

NAND_ALE
1 JTAG ENABLE
0 JTAG DISABLE

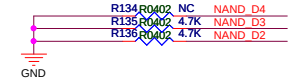

NAND_D4	NAND_D3	NAND_D2	
1	1	1	Boot from nand without RB
1	1	0	Nand with RB
1	0	X	SPI nor flash romboot
0	1	1	Boot from iNAND uses SDIOC
0	1	0	Boot from iNAND uses SDIOB
0	0	1	Boot from iNAND uses SDIOA

Power ON Config

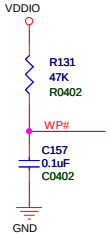

TSOP_NAND

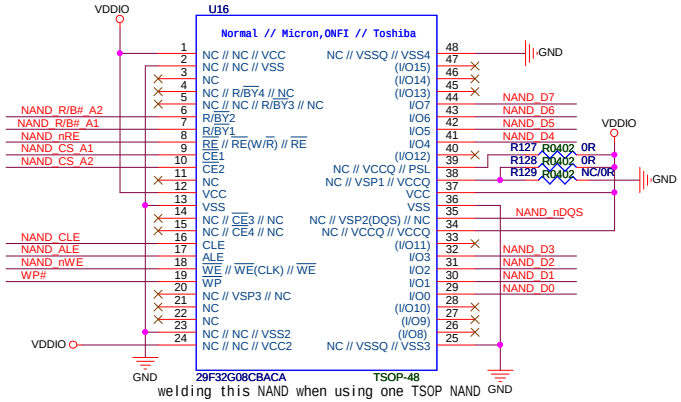

welding this NAND when using one TSOP NAND

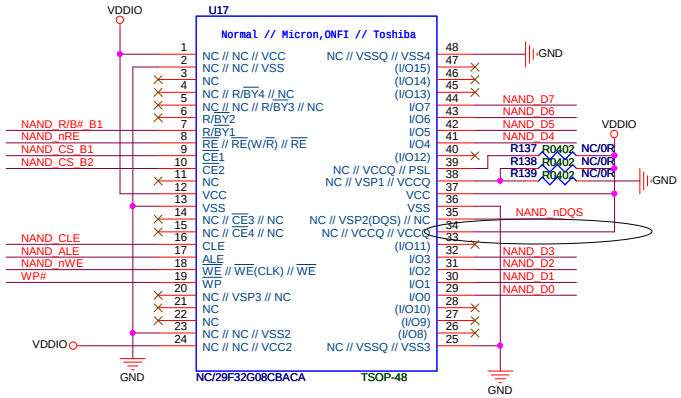

SPI NOR

Reserved for Debug

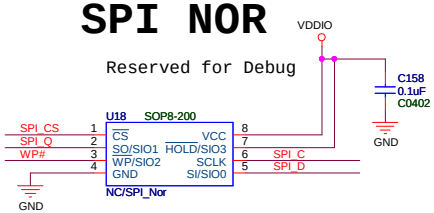

SPI nor flash places to the easy welding place where can be weld when open the shell.

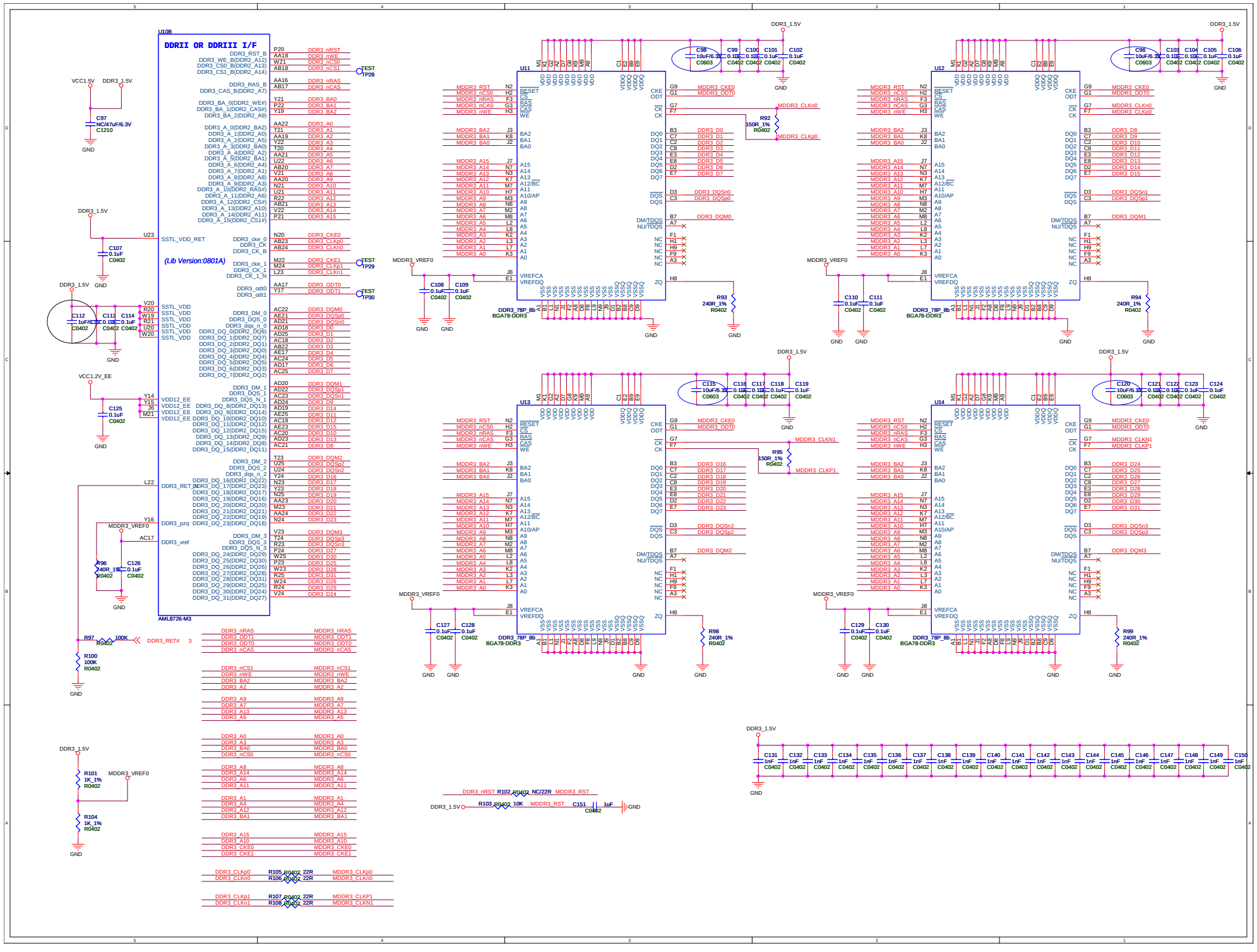
U10B
DDRII OR DDRIII I/F
(Lib Version:0801A)
AML8726-M3
U11
U12
U13
U14
DDR3_78P_8b
BGA78-DDR3
DDR3_1.5V
VCC1.5V
VCC1.2V_EE
MDDR3_VREF0
GND

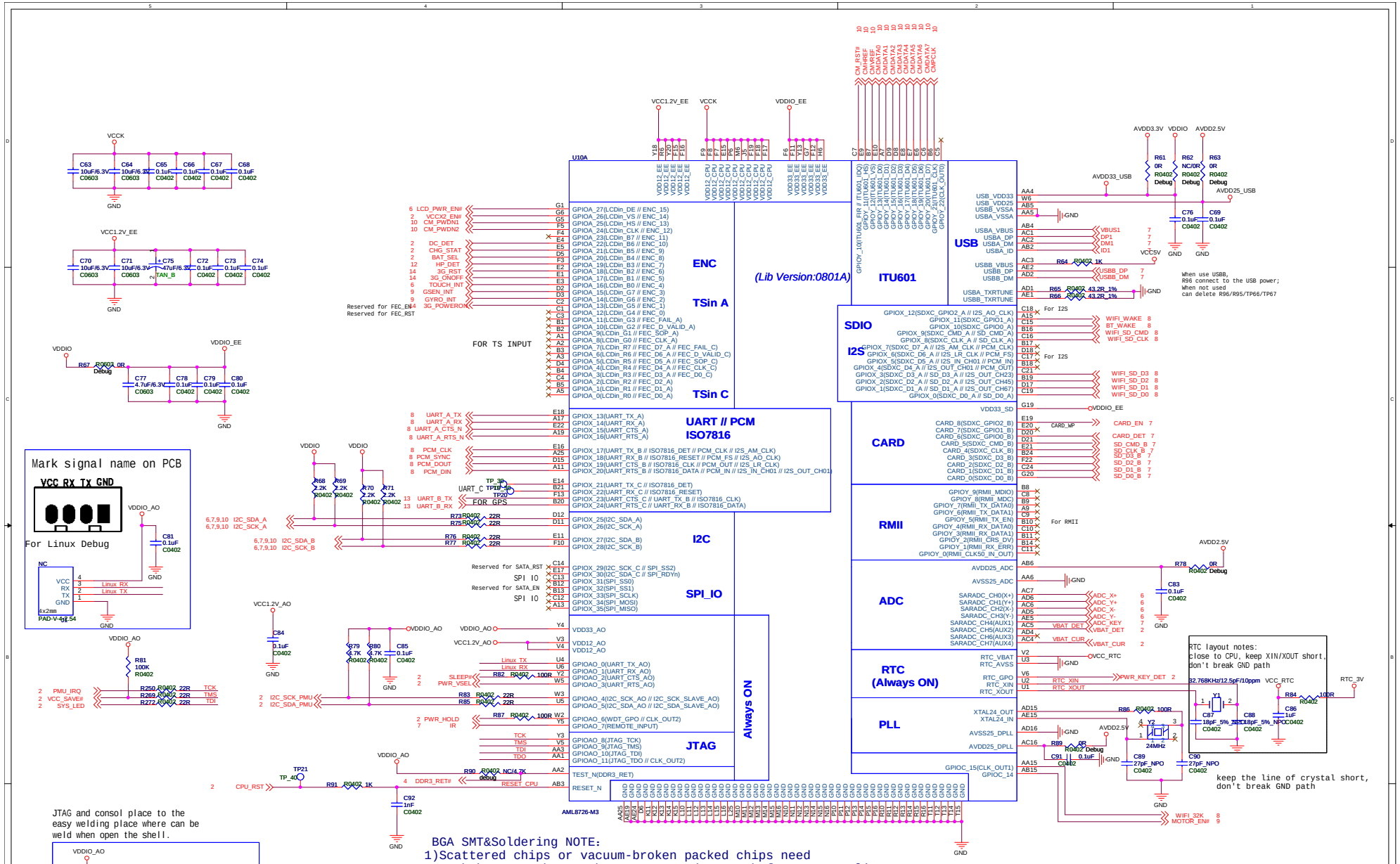
U10A
(Lib Version:0801A)
ITU601
ENC
TSin A
TSin C
FOR TS INPUT
UART // PCM
ISO7816
I2C
SPI_IO
Always ON
JTAG
AML8726-M3
USB
SDIO
I2S
CARD
RMII
ADC
RTC
(Always ON)
PLL
Mark signal name on PCB
VCC Rx Tx GND
For Linux Debug
RTC layout notes:
close to CPU, keep XIN/XOUT short,
don't break GND path
keep the line of crystal short,
don't break GND path
JTAG and consol place to the
easy welding place where can be
weld when open the shell.
mark signal name on PCB
BGA SMT&Soldering NOTE:
1)Scattered chips or vacuum-broken packed chips need
to bake more than 12 hours at 100 degrees,before on-SMT line
And must completed soldering within 48 hours if open vacuum-packed or finish baking
Otherwise, burst vapor will damage the chip during the welding process
2)Require both sides of heating equipment, in order to avoid PCB damage or PCB distortion
3) Self-hand soldering need to have skilled operators
It is recommended to welding in professional BGA soldering factory.
If cpu had bad welding or welding damage
It will very difficult to debug PCBA

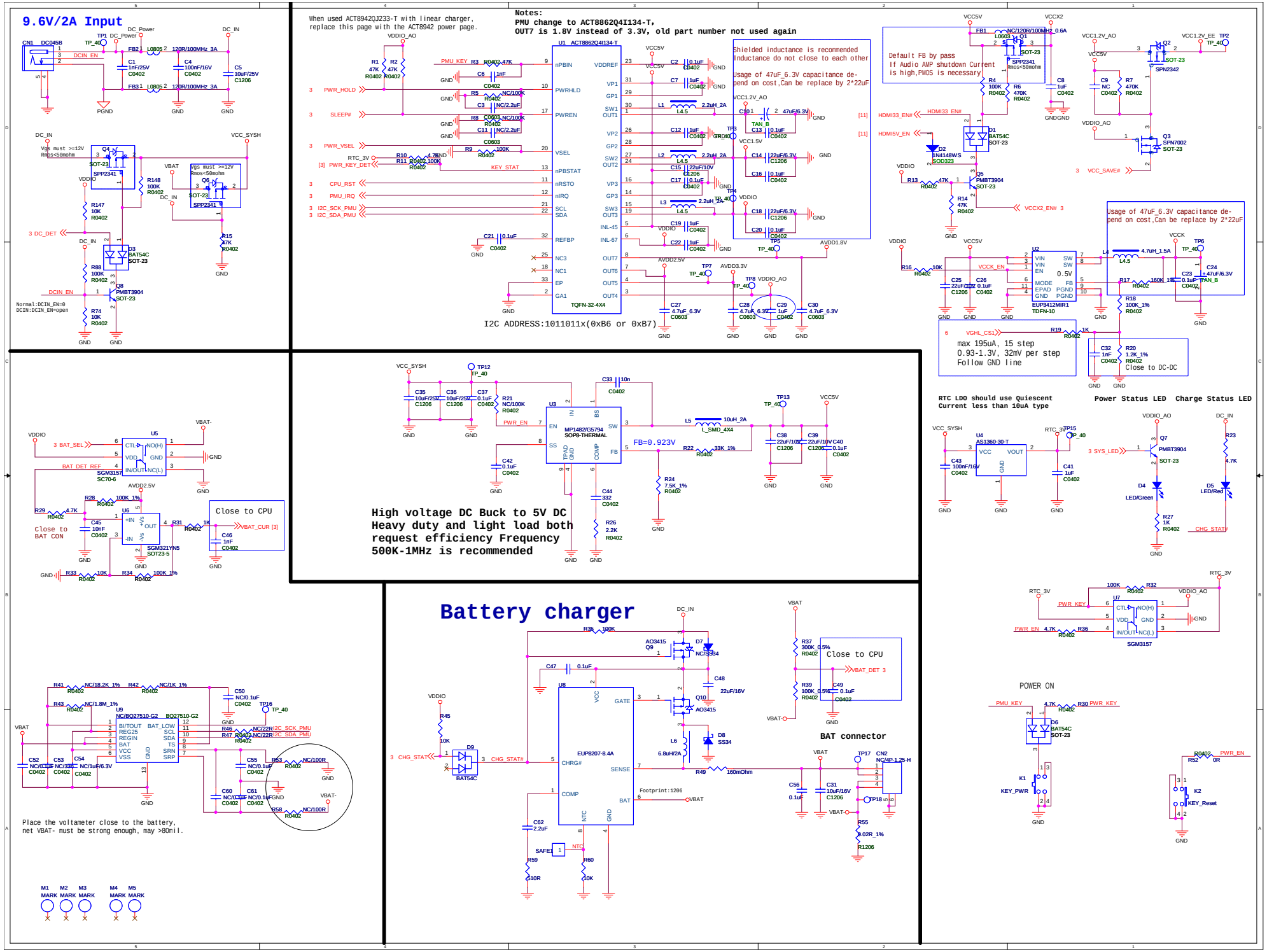
9.6V/2A Input
When used ACT8942QJ233-T with linear charger, replace this page with the ACT8942 power page.
Notes:
PMU change to ACT8862Q4I134-T,
OUT7 is 1.8V instead of 3.3V, old part number not used again
U1 ACT8862Q4I134-T
TQFN-32-4X4
I2C ADDRESS:1011011x(0xB6 or 0xB7)
Shielded inductance is recommended
Inductance do not close to each other
Usage of 47uF_6.3V capacitance depend on cost,Can be replace by 2*22uF
Default FB by pass
If Audio AMP shutdown Current is high,PMOS is necessary
EUP3412MIR1
TDFN-10
0.5V
max 195uA, 15 step
0.93-1.3V, 32mV per step
Follow GND line
Close to DC-DC
RTC LDO should use Quiescent Current less than 10uA type
Power Status LED
Charge Status LED
Close to CPU
Close to BAT CON
High voltage DC Buck to 5V DC
Heavy duty and light load both request efficiency Frequency 500K-1MHz is recommended
FB=0.923V
Battery charger
BAT connector
POWER ON
Place the voltameter close to the battery, net VBAT- must be strong enough, may >80mil.

2-CELLS LI BATTERY

VCC9V/VBAT
- <BUCK> VCC5V
- <LDO> RTC_3V
  Should use high voltage type LDO

VCC5V
- <MOS> VCC_AMP
- <RT9702> USB_PWR
- <MOS> HDMI_PW
- <MOS> <Boost>LCD_AVDD
- <BUCK> VCC1.2V_AO — VCC1.2V_EE
- <BUCK> VCCK — VCC1.2V_EE
- <BUCK> VCC1.5V
- <Boost> LED backlight
- <LDO> VDDIO_AO
- <LDO> AVDD3.3/3.0V — AVDD33_USB (USB boot USE)
  HDMI_3.3V
- <BUCK> VDDIO
  - <LDO> AVDD2.5V (PLL/VDAC/USB ADC/AudioCodac)
  - <LDO> VCC1.8V/2.8VA(Camera)
  - VDDIO_EE
    VDDIO_CM
    G/C/M Sensor
    GPS
    HDMI_PLL_AVDD
    WIFI
  - <MOS> CARD_VCC (romboot power on card_vcc)
  - <MOS> LCD_3.0V
  - <MOS> Touch
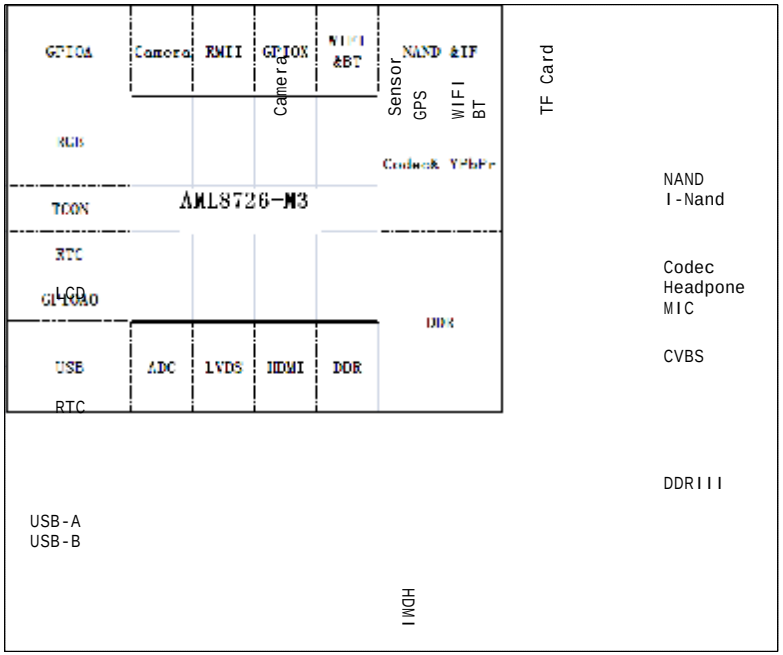
When push PWR KEY
PWR_EN must be valid to power on the 5V power supply