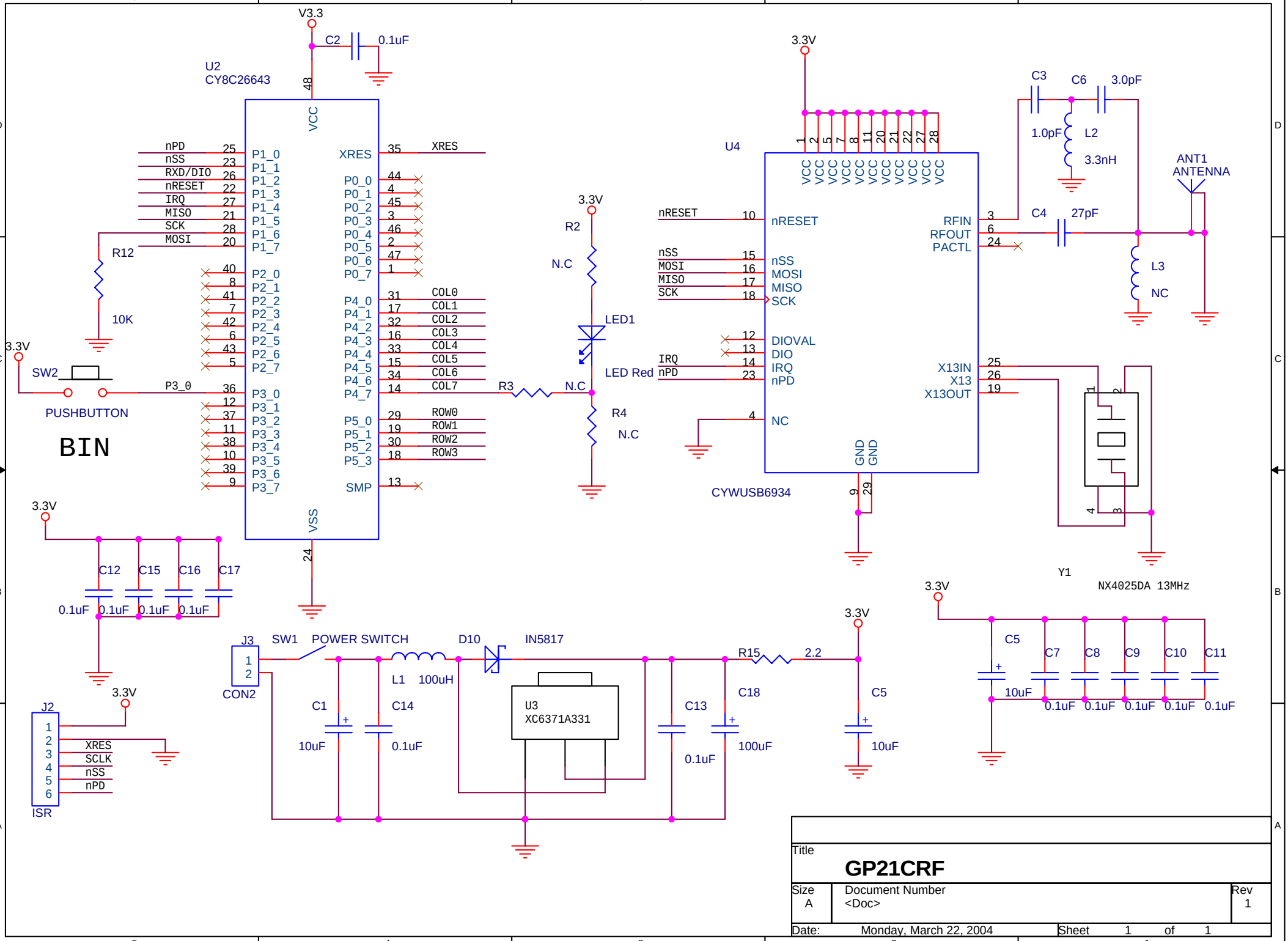

Title

GP21CRF

Size	Document Number	Rev
A	<Doc>	1

Date: Monday, March 22, 2004 Sheet 1 of 1