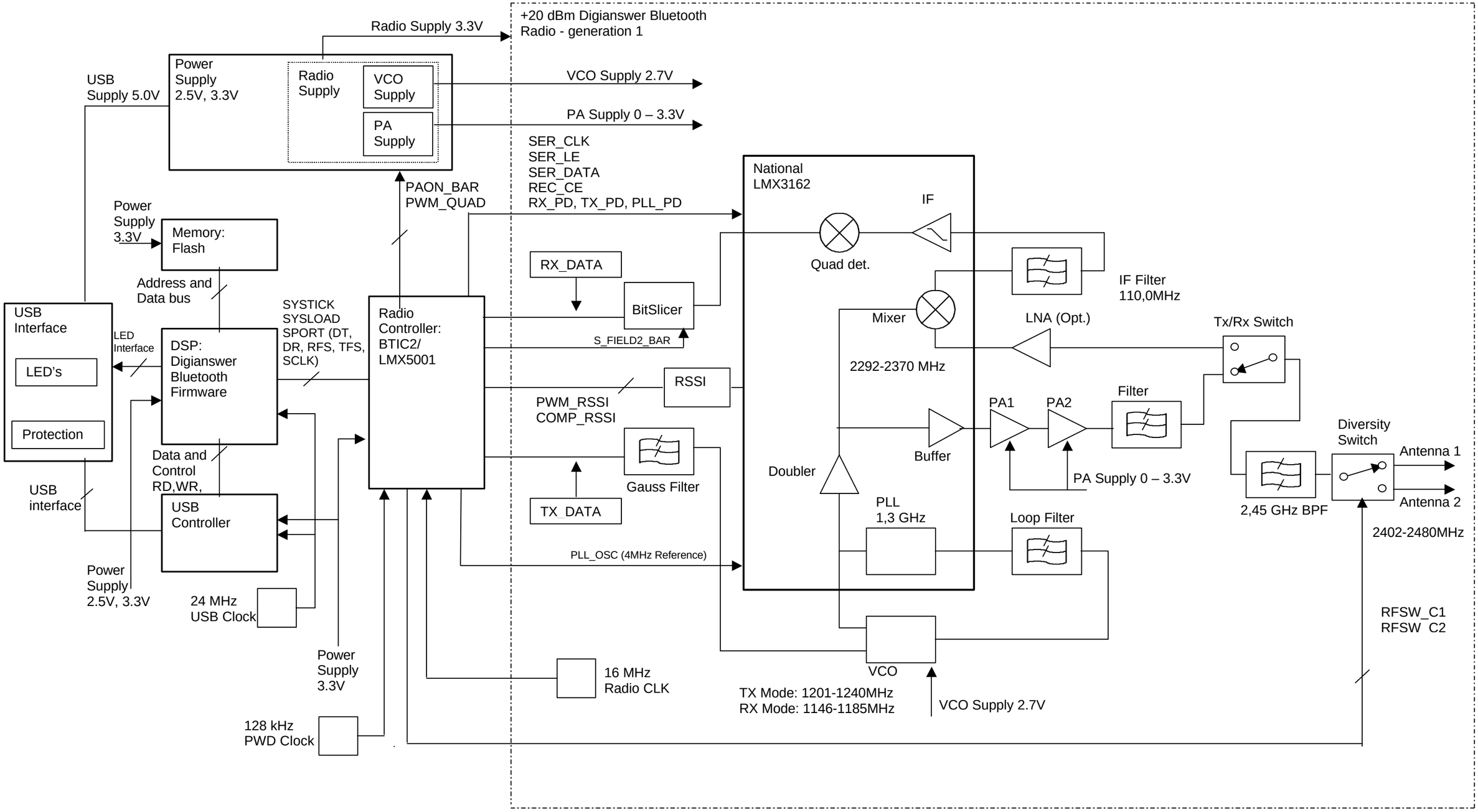11 +20dBm Protocol Analyser Block Diagram