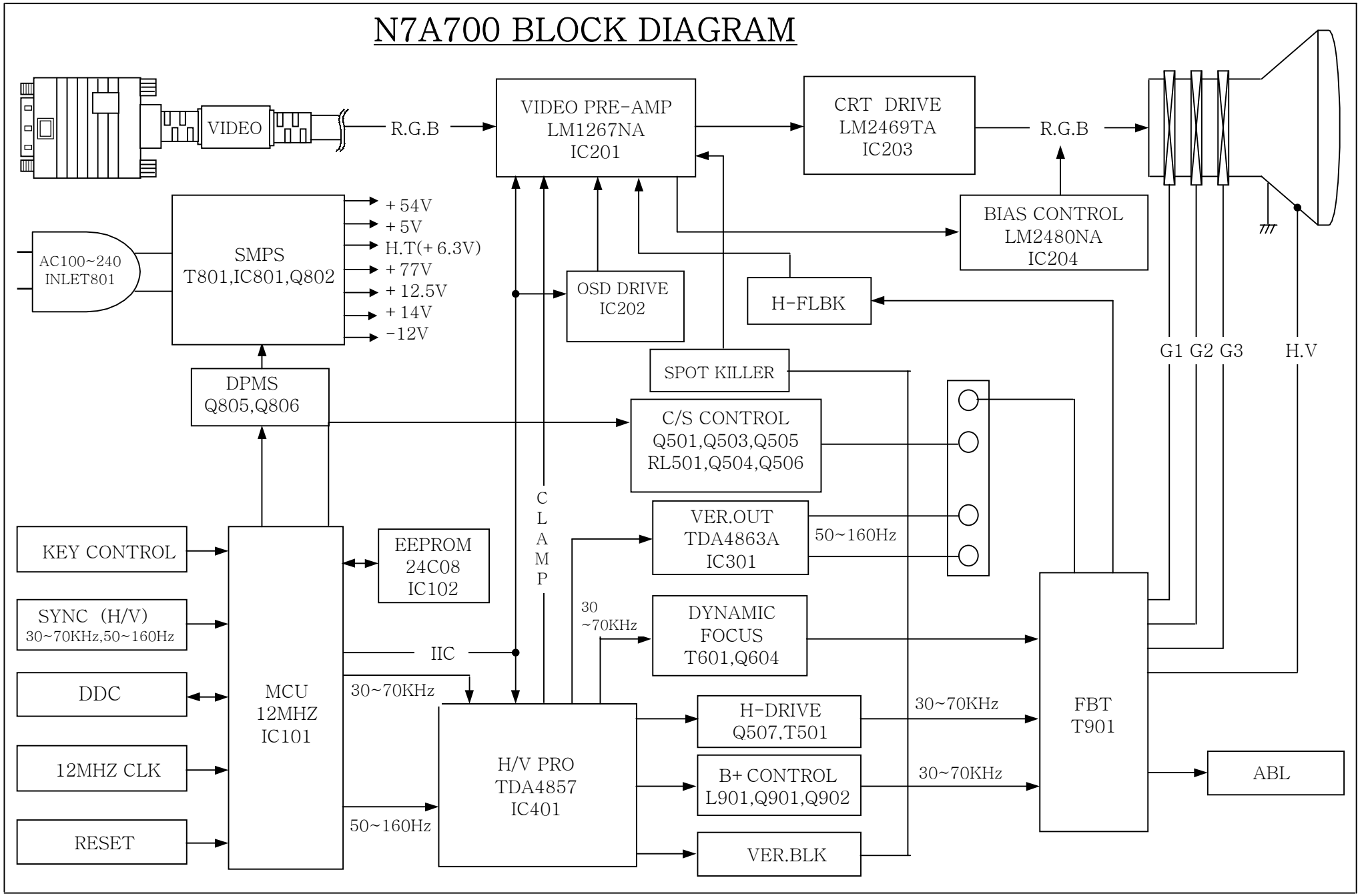N7A700 BLOCK DIAGRAM