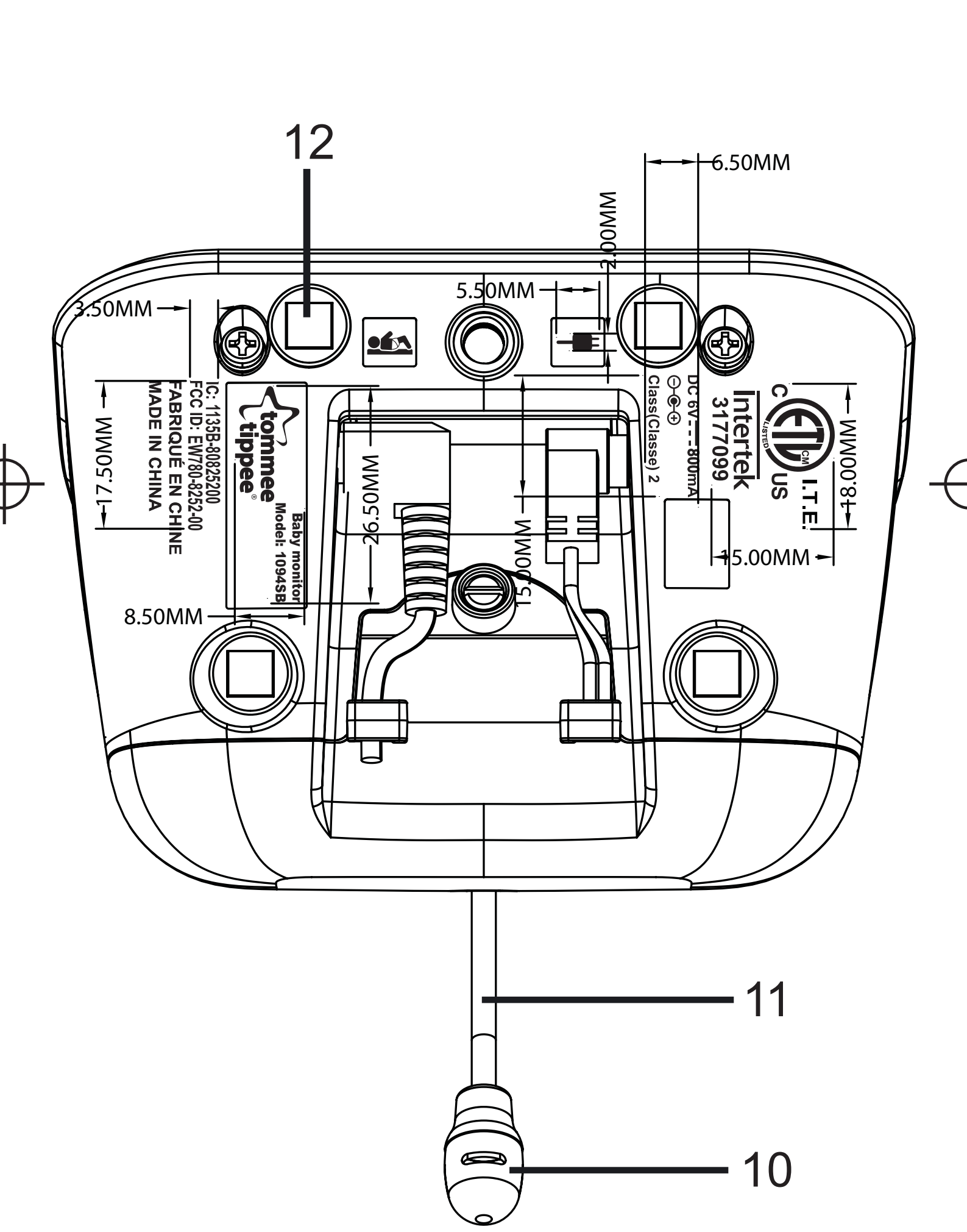
12
6.50MM
2.00MM
5.50MM
3.50MM
DC 6V⎓800mA
Class(Classe) 2
Intertek
3177099
I.T.E.
US
8.00MM
15.00MM
17.50MM
26.50MM
15.00MM
8.50MM
IC: 1135B-80825200
FCC ID: EW780-8252-00
FABRIQUÉ EN CHINE
MADE IN CHINA
tommee tippee
Baby monitor
Model: 1094SB
11
10

11
6.50MM
2.00MM
5.50MM
3.50MM
DC 6V 800mA
Class(Classe) 2
Intertek
3177099
I.T.E.
LISTED
c
US
8.00MM
15.00MM
26.50MM
15.00MM
17.50MM
8.50MM
tommee
tippee
Baby monitor
Model: 1094B
IC: 1135B-80825200
FCC ID: EW780-8252-00
FABRIQUÉ EN CHINE
MADE IN CHINA
10
9