CS61X4-X DE58 Engraving draft

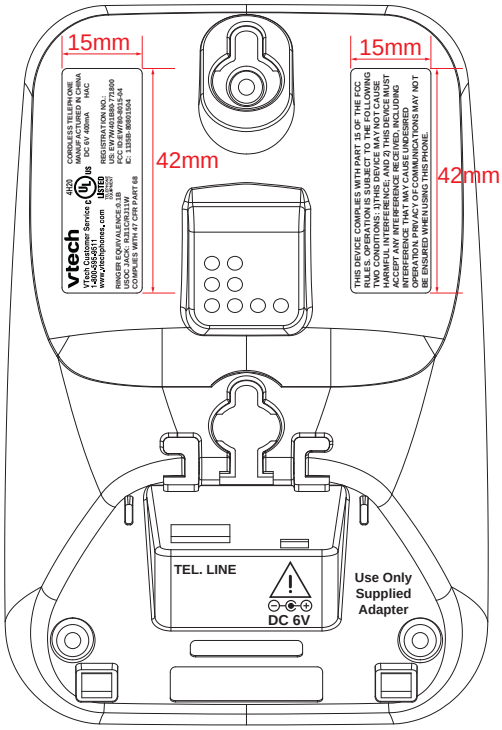

C Telephone Base

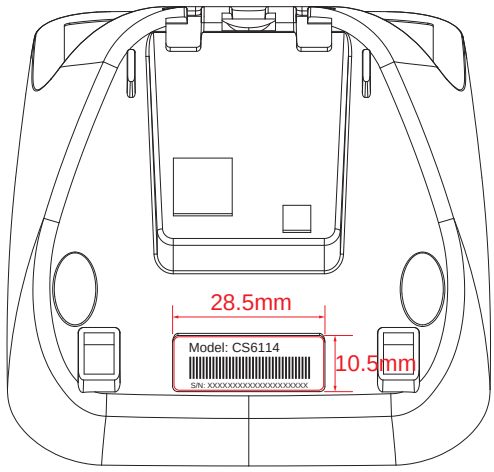

SN Label
28X10mm

CAN

Model: CS6114 C
S/N: XXXXXXXXXXXXXXXXXXXX

Model: CS6114-11 C
S/N: XXXXXXXXXXXXXXXXXXXX

Model: CS6114-2 C
S/N: XXXXXXXXXXXXXXXXXXXX

Model: CS6114-21 C
S/N: XXXXXXXXXXXXXXXXXXXX

USA

Model: CS6114
S/N: XXXXXXXXXXXXXXXXXXXX

Model: CS6114-11
S/N: XXXXXXXXXXXXXXXXXXXX

Model: CS6114-2
S/N: XXXXXXXXXXXXXXXXXXXX

Model: CS6114-21
S/N: XXXXXXXXXXXXXXXXXXXX