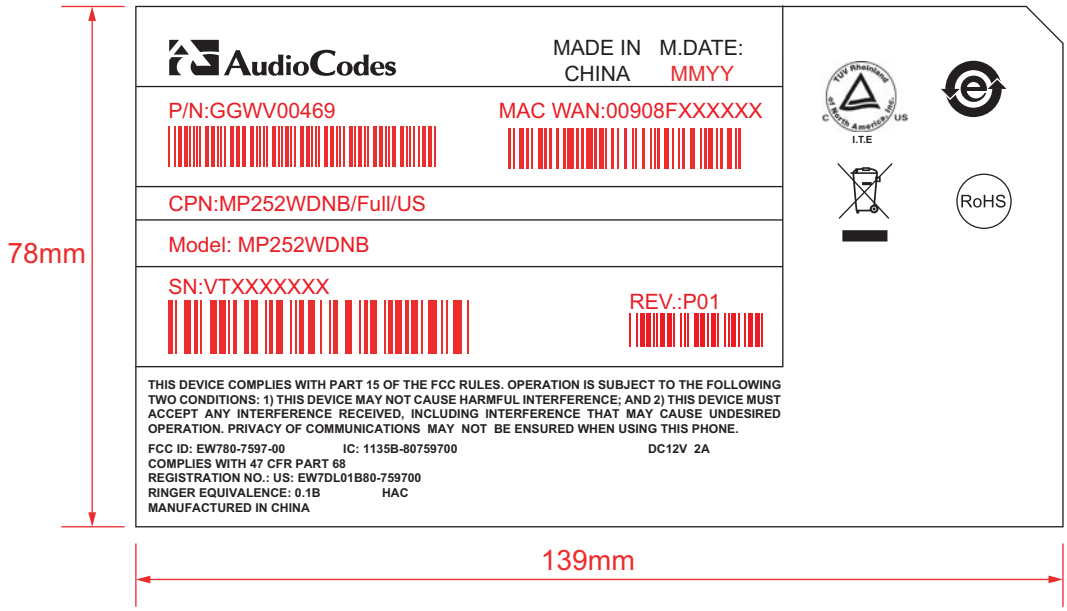
AudioCodes
MADE IN CHINA
M.DATE: MMYY
P/N:GGWV00469
MAC WAN:00908FXXXXXX
CPN:MP252WDNB/Full/US
Model: MP252WDNB
SN:VTXXXXXXX
REV.:P01
THIS DEVICE COMPLIES WITH PART 15 OF THE FCC RULES. OPERATION IS SUBJECT TO THE FOLLOWING TWO CONDITIONS: 1) THIS DEVICE MAY NOT CAUSE HARMFUL INTERFERENCE; AND 2) THIS DEVICE MUST ACCEPT ANY INTERFERENCE RECEIVED, INCLUDING INTERFERENCE THAT MAY CAUSE UNDESIRED OPERATION. PRIVACY OF COMMUNICATIONS MAY NOT BE ENSURED WHEN USING THIS PHONE.
FCC ID: EW780-7597-00
IC: 1135B-80759700
DC12V 2A
COMPLIES WITH 47 CFR PART 68
REGISTRATION NO.: US: EW7DL01B80-759700
RINGER EQUIVALENCE: 0.1B
HAC
MANUFACTURED IN CHINA
I.T.E
RoHS
78mm
139mm

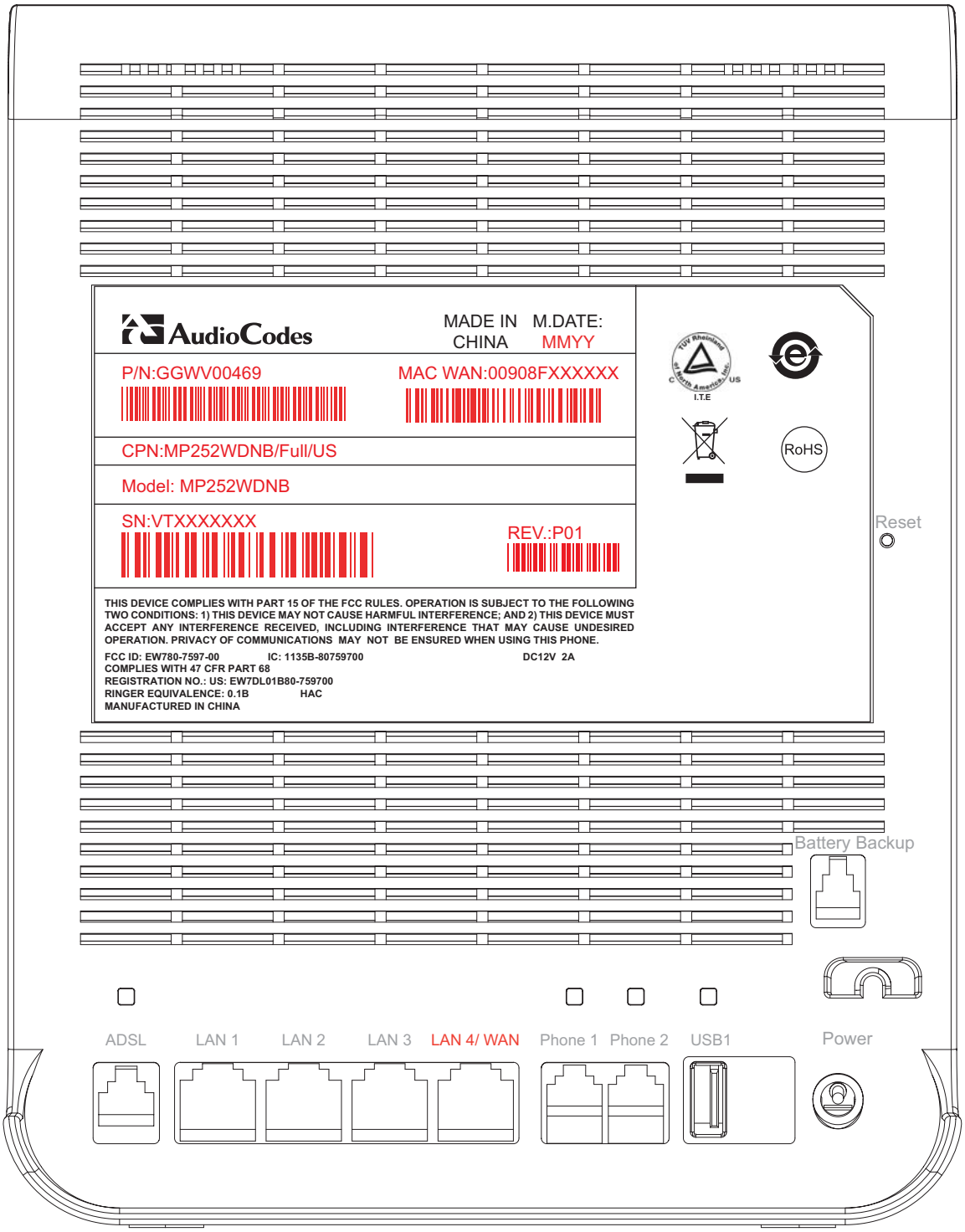
AudioCodes
MADE IN CHINA
M.DATE: MMYY
P/N:GGWV00469
MAC WAN:00908FXXXXXX
CPN:MP252WDNB/Full/US
Model: MP252WDNB
SN:VTXXXXXXX
REV.:P01
THIS DEVICE COMPLIES WITH PART 15 OF THE FCC RULES. OPERATION IS SUBJECT TO THE FOLLOWING TWO CONDITIONS: 1) THIS DEVICE MAY NOT CAUSE HARMFUL INTERFERENCE; AND 2) THIS DEVICE MUST ACCEPT ANY INTERFERENCE RECEIVED, INCLUDING INTERFERENCE THAT MAY CAUSE UNDESIRED OPERATION. PRIVACY OF COMMUNICATIONS MAY NOT BE ENSURED WHEN USING THIS PHONE.
FCC ID: EW780-7597-00
IC: 1135B-80759700
DC12V 2A
COMPLIES WITH 47 CFR PART 68
REGISTRATION NO.: US: EW7DL01B80-759700
RINGER EQUIVALENCE: 0.1B
HAC
MANUFACTURED IN CHINA
I.T.E
RoHS
Reset
Battery Backup
ADSL
LAN 1
LAN 2
LAN 3
LAN 4/ WAN
Phone 1
Phone 2
USB1
Power
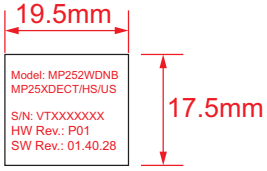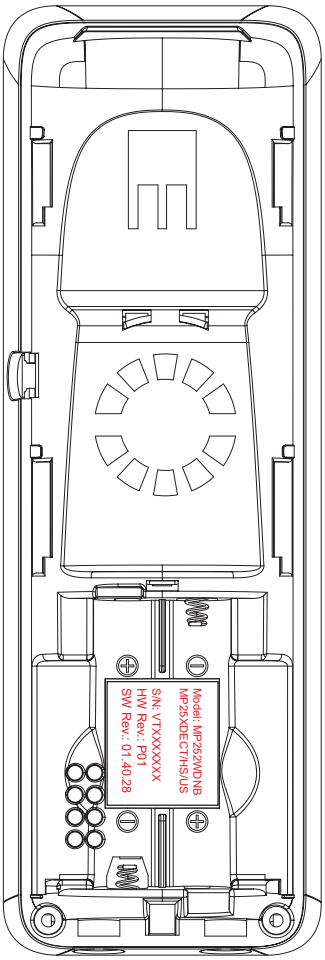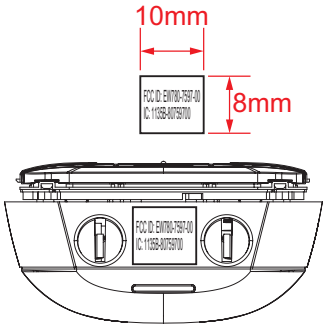
Handset Label