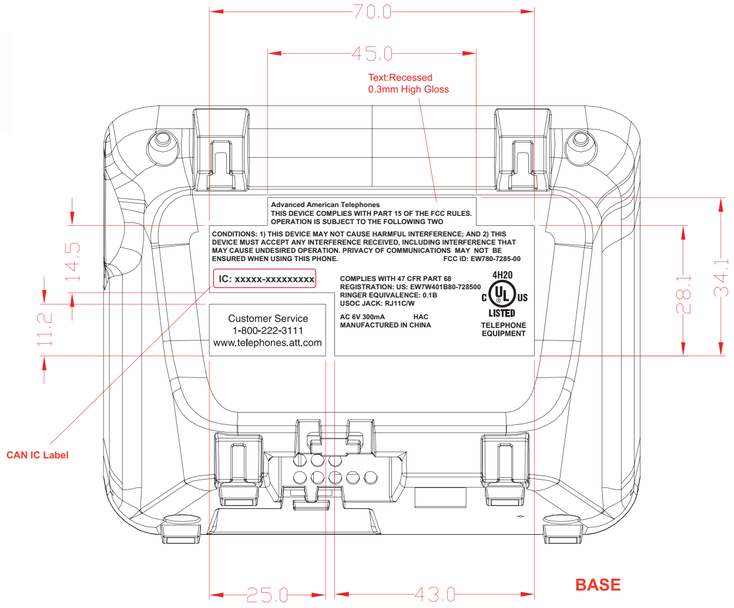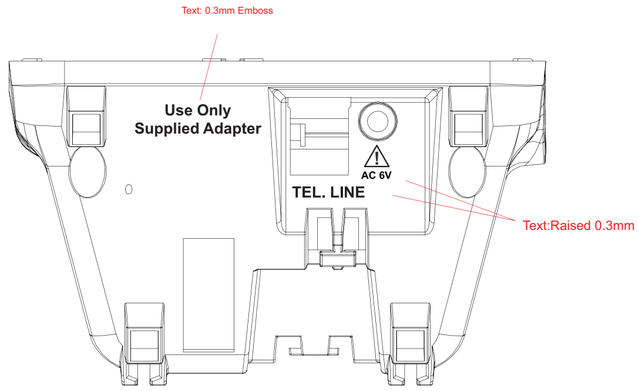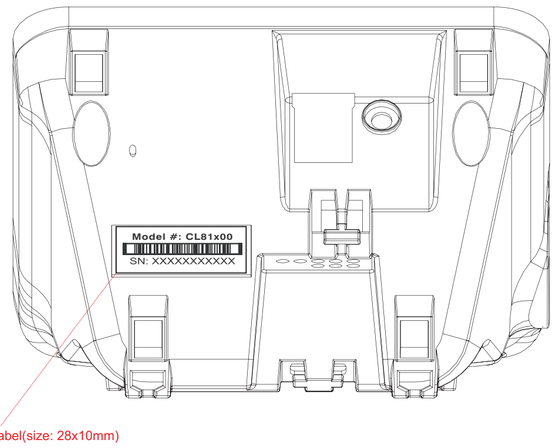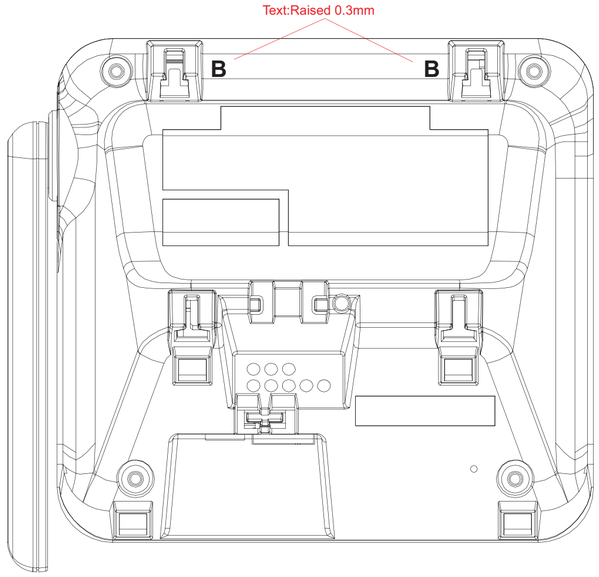CL81x00 Engraving draft