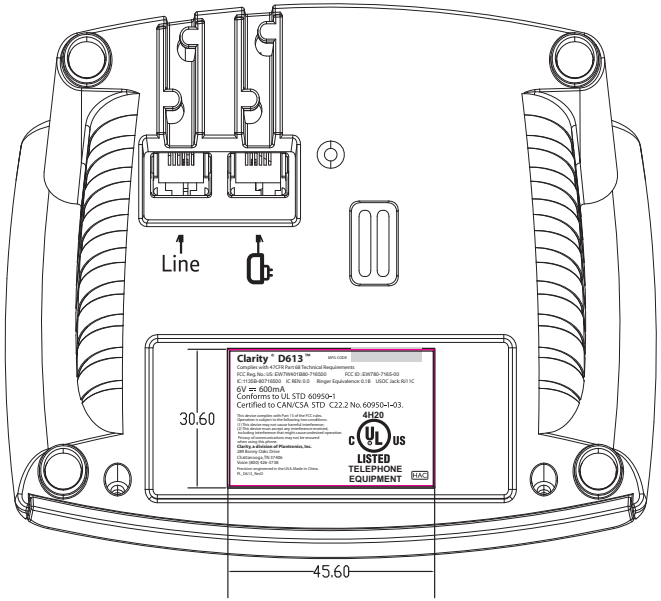

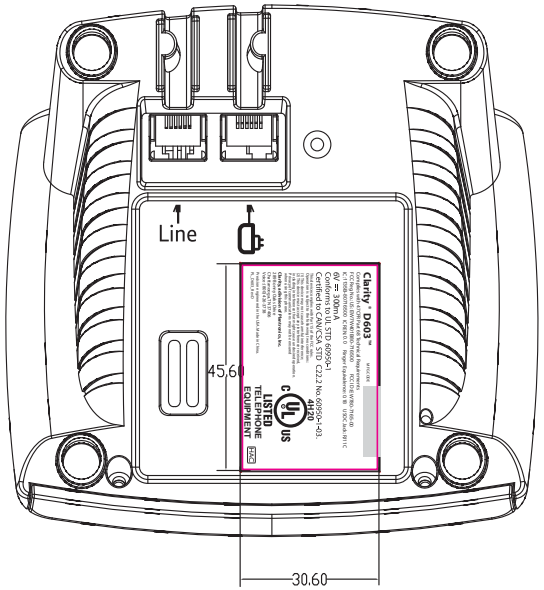

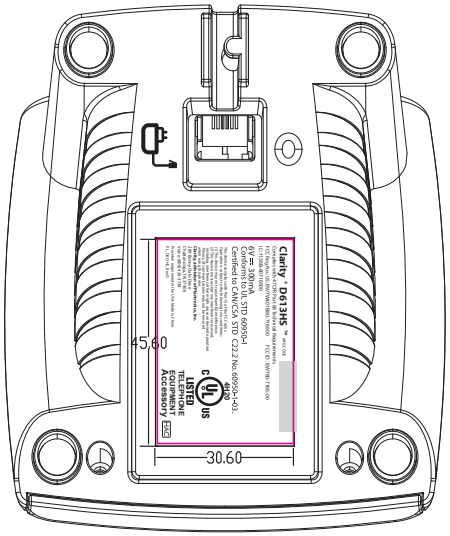

D613 Lable size(45x30)

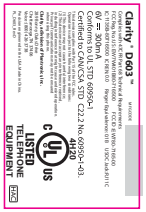

D603 Lable size(30x45)

D613HS Lable size(30x5)

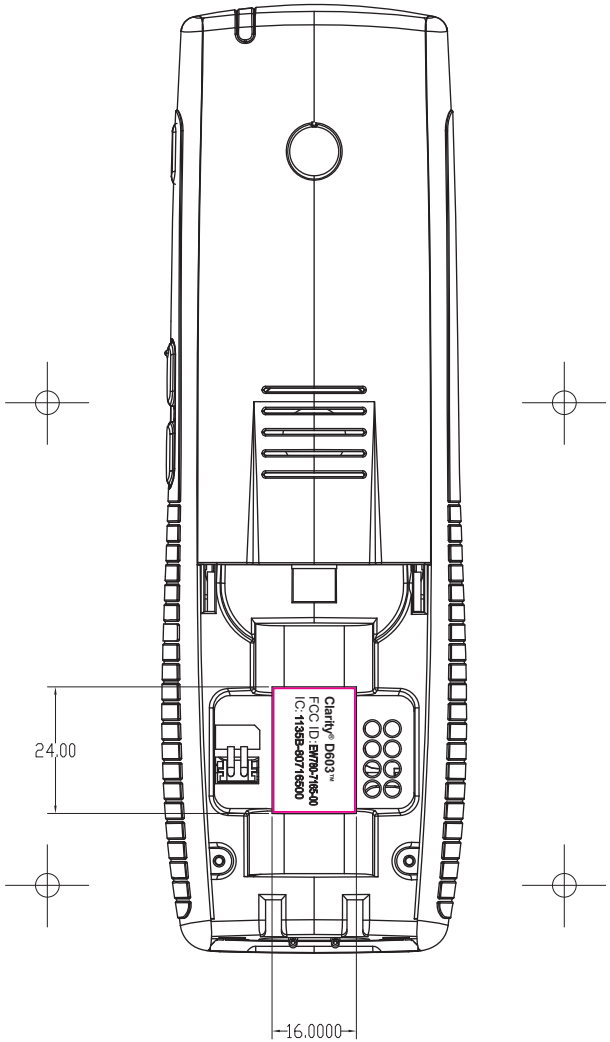

D603 HS label size(23.4x15.4)

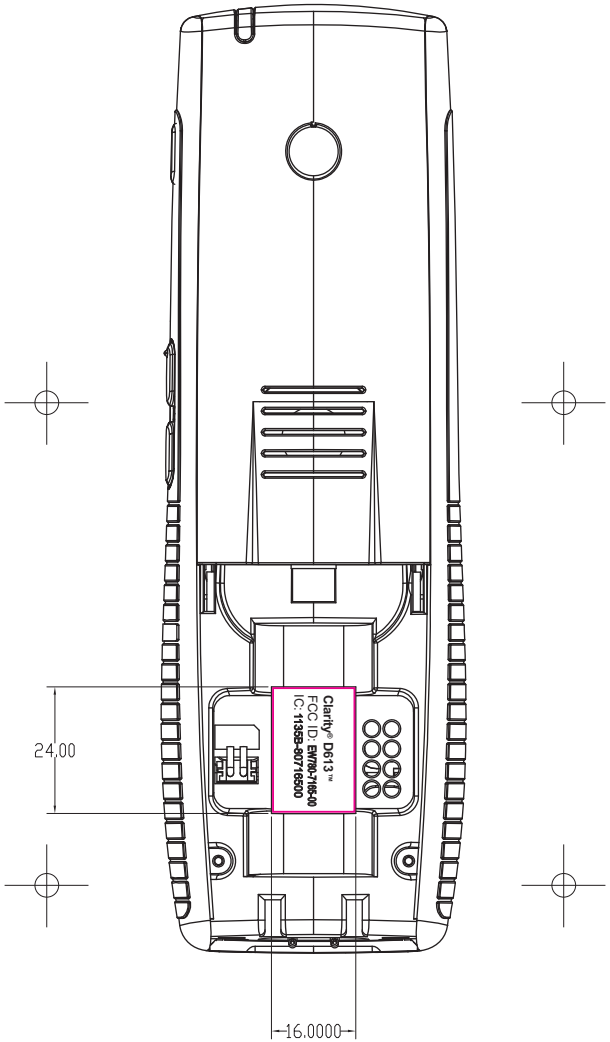

D613 label size(23.4x15.4)

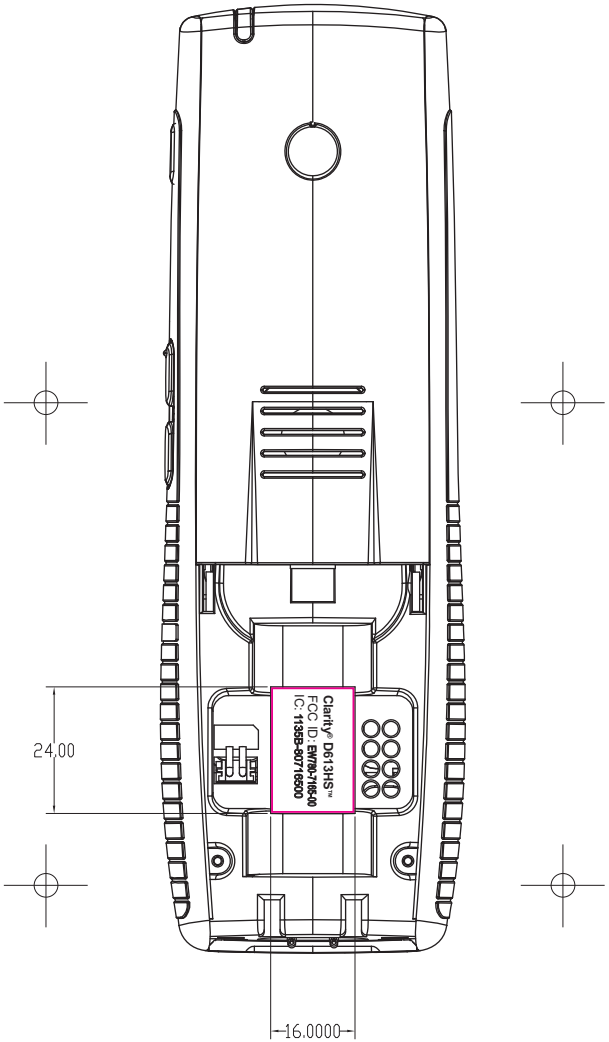

D613HS label size(23.4x15.4)