VTech Telecommunications Ltd.

Application
For
Permissive Change Class II

Unlicensed Personal Communication Service Devices

FCC ID: EW780-6270-00

Test Report Number: HK08020493-1

Issue Date: February 27, 2008

TL/ ac

- The test report only allows to be revised within three years from its original issued date unless further standard or the requirement was noticed.
- This report is for the exclusive use of Intertek's Client and is provided pursuant to the agreement between Intertek and its Client. Intertek's responsibility and liability are limited to the terms and conditions of the agreement. Intertek assumes no liability to any party, other than to the Client in accordance with the agreement, for any loss, expense or damage occasioned by the use of this report. Only the Client is authorized to permit copying or distribution of this report and then only in its entirety. Any use of the Intertek name or one of its marks for the sale or advertisement of the tested material, product or service must first be approved in writing by Intertek. The observations and test results in this report are relevant only to the sample tested. This report by itself does not imply that the material, product, or service is or has ever been under an Intertek certification program.

Intertek Testing Services Hong Kong Ltd.
2/F., Garment Centre, 576 Castle Peak Road, Kowloon, Hong Kong.
Tel: (852) 2173 8888 Fax: (852) 2785 5487 Website: www.hk.intertek-etlsemko.com

LIST OF EXHIBITS

INTRODUCTION

EXHIBIT 1:	Summary of Tests
EXHIBIT 2:	General Description
EXHIBIT 3:	System Test Configuration
EXHIBIT 4:	Measurement Results
EXHIBIT 5:	Equipment Photographs
EXHIBIT 6:	Product Labelling
EXHIBIT 7:	Technical Specifications
EXHIBIT 8:	Instruction Manual
EXHIBIT 9:	UTAM Affidavit
EXHIBIT 10:	Security Code Information
EXHIBIT 11:	Letter of Agency
EXHIBIT 12:	Confidentiality Request

MEASUREMENT/TECHNICAL REPORT

VTech Telecommunications Ltd. - Model: LS6117, LS6117-xy

FCC ID: EW780-6270-00

This report concerns (check one:) Original Grant ___ Class II Change _X_

Equipment Type : PUB - Part 15 Unlicensed PCS Base Station
PUE - Part 15 Unlicensed PCS portable Tx held to ear

Deferred grant requested per 47 CFR 0.457(d)(1)(ii)? Yes _____ No ___X___

If yes, defer until :

_____
Date

Company Name agrees to notify the Commission by: _____
Date

of the intended date of announcement of the product so that the grant can be issued on that date.

Transition Rules Request per 15.37? Yes _____ No ___X__

If no, assumed Part 15, Subpart D for Unlicensed Personal Communication Service Device - the new 47 CFR [05-04-07 Edition] Provision.

Report prepared by: Leung Wai Leung, Tommy

Intertek Testing Services Hong Kong Ltd.
2/F., Garment Centre,
576 Castle Peak Road,
Kowloon, Hong Kong.
Phone : 852-2173-8538
Fax: 852-2741-1693

Table of Contents

1.0 Summary of Test Results 6

2.0 General Description 8
2.1 Product Description 8
2.2 Purpose of Application 9
2.3 Test Methodology 9
2.4 Test Facility 9

3.0 System Test Configuration 11
3.1 Justification 11
3.2 Conducted Emission Test Configuration 12
3.3 Conducted Monitoring and Operational Test Configuration 12
3.4 EUT Exercising Software 12
3.5 Details of EUT and Description of Peripherals 13
3.6 Measurement Uncertainty 14
3.7 Equipment Modification 14

4.0 Measurement Results 16
4.1 Emission Bandwidth 16
4.2 Peak Transmit Power 17
4.3 Unwanted Emission Inside the Sub-Band 19
4.4 Emissions Outside the Sub-Band 21
4.4.1 Radiated Emissions Configuration Photographs 22
4.4.2 Radiated Emissions Data 23
4.4.3 Field Strength Calculation 34
4.4.4 Transmitter Duty Cycle Calculation and Measurements 35
4.5 AC Power Lines Conducted Emissions from Transmitter portion of EUT 36
4.5.1 AC Power Lines Conducted Emissions Configuration Photographs 37
4.5.2 AC Power Line Conducted Emissions Data 38
4.6 Radiated Emissions from Computing Device Peripheral Portion of EUT 39
4.7 AC Power Lines Conducted Emissions from Computing Device Peripheral Portion of EUT 40
4.8 Radio Frequency Radiation Exposure 41
4.9 Frame Jitter 42

5.0 Equipment Photographs 44

6.0 Product Labelling 46

7.0 Technical Specifications 48

8.0 Instruction Manual 50

9.0 Security Code Information 52

10.0 UTAM Affidavit 54

11.0 Letter of Agency 56

12.0 Confidentiality Request 58

List of Attached Files

Exhibit Type	File Description	Filename
Operational Description	Technical Description	descri.pdf
Operational Description	Purpose of Change	product change.pdf
Test Report	Test Report	report.pdf
Test Report	Emission Bandwidth and Test Frequency Plots	26bw.pdf
Test Report	Peak Transmit Power Plots	peaktp.pdf
Test Report	Unwanted Emission Inside Sub-Band Plots	inband.pdf
Test Report	Duty Cycle Calculation and Measurement	dcc.pdf
Test Report	AC Lines Conducted Emission Data	conduct.pdf
Test Setup Photo	Radiated Emission Test Configuration	config photos. pdf
Test Setup Photo	AC Lines Conducted Emission Test Configuration	
RF Exposure Info	RF Safety	RF exposure info.pdf
	SAR Report	SAR Report 1 of 2.pdf SAR Report 2 of 2.pdf
External Photos	External Photo	external photos.pdf
Internal Photos	Internal Photo	internal photos.pdf
ID Label/Location Info	Label Artwork and Location	label.pdf
Cover Letter	Label Location Justification	justification.pdf
Block Diagrams	Block Diagram	block.pdf
Schematics	Circuit Diagram	circuit.pdf
User Manual	User Manual	manual.pdf
Operational Description	Security Code Information	security code information.pdf
Attestation Statements	UTAM affidavit	utam.pdf
Cover Letter	Letter of Agency	letter of agency.pdf
Cover Letter	Confidentiality Request	request.pdf

EXHIBIT 1
SUMMARY OF TEST RESULTS

1.0 Summary of Test Results

VTech Telecommunications Ltd. - Model: LS6117, LS6117-xy

FCC ID: EW780-6270-00

Technical Requirements				
Test Items	**FCC Part 15 Section**	**Test Procedure ANSI C63.17 / ANSI C63.4 ***	**Results**	**Details see section**
Emission Bandwidth	15.323(a)	6.1.3	Pass	4.1
Peak Transmit Power	15.319(c)	6.1.2	Pass	4.2
Unwanted Emission Inside the Sub-Band	15.323(d)	6.1.6.1	Pass	4.3
Emissions Outside the Sub-Band	15.323(d)	6.1.6.2	Pass	4.4
AC Power Lines Conducted Emissions from Transmitter Portion of EUT	15.315	7 *	Pass	4.5
Radiated Emissions from Computing Device Peripheral Portion of EUT	15.109(a)	8 *	NA	4.6
AC Power Lines Conducted Emissions from Computing Device Peripheral Portion of EUT	15.107(a)	7 *	NA	4.7
Radio Frequency Radiation Exposure	15.319(i)	---	Pass	4.8
Frame Jitter	15.323(e)	6.2.3	Pass	4.9
Security Code	5	---	Pass	9.0

Test Engineer:

Ken Sit
Supervisor

Date: February 27, 2008

Approved By:

Leung Wai Leung, Tommy
Senior Manager

Date: February 27, 2008

EXHIBIT 2
GENERAL DESCRIPTION

2.0 General Description

2.1 Product Description

The LS6117 is 1.9GHz Digital Modulation Cordless Phone with Caller ID. It operate at frequency range of 1921.536MHz to 1928.448MHz with 5 channels. The internal power supply's isolation is accomplished through a power transformer having an adequate dielectric rating. The circuit wiring are consistent under the requirement of part 68.

The antennas used in base unit and handset are integral, and the test sample is a prototype.

The Model: LS6117-xy is the same as the Model: LS6117 in hardware aspect. Suffix “x” is represents number of handsets and suffix “y” is color code. The difference in model number serves as the marketing strategy.

The RF module with antenna, algorithm and Listen-Before-Transmit protocol among all models are identical.

The Handsets are identical among models as follows: electrical designs, including software and firmware, PCB layout and construction design/ physical design/ enclosure.

Connection between the base unit and the telephone network is accomplished through the use of USOC RJ11C in the 2-wire loop calling central office line.

The circuit description and digital modulation techniques description are saved as filename: descri.pdf

2.2 Purpose of Application

The purpose of change is saved as filename: product change.pdf

For the Model: LS6117 and LS6117-xy, the RF circuit and algorithm are the same as the original granted Model: DS6121. The baseband, enclosure and RF layout for Base Unit and Handset are changed.

This is an application for Certification of a PUB - Part 15 Unlicensed PCS Base Station, PUE - Part 15 Unlicensed PCS portable Tx held to ear. The device is also subject to Part 68 Registration. A Verification report has been prepared for the digital device portion.

2.3 Test Methodology

The radiated emission measurements for unintentional radiator and AC power line-conducted emission measurements were performed according to the test procedures specified in ANSI C63.4 (2003). The radiated emission measurements for intentional radiator contained in UPCS device, antenna conducted measurements were performed according to the test procedures specified in ANSI C63.17 (2006). All radiated measurements were performed in Open Area Test Sites. Preliminary scans were performed in the Open Area Test Sites only to determine worst case modes. All radiated tests were performed at an antenna to EUT distance of 3 meters, unless stated otherwise in the "Justification Section" of this Application. All other measurements were made in accordance with the procedures in 47 CFR Part 2.

2.4 Test Facility

The open area test site and conducted measurement facility used to collect the emission data is located at Garment Centre, 576 Castle Peak Road, Kowloon, Hong Kong. This test facility and site measurement data have been fully placed on file with the FCC.

EXHIBIT 3
SYSTEM TEST CONFIGURATION

3.0 System Test Configuration

3.1 Justification

For emissions testing, the equipment under test (EUT) was setup to transmit continuously in burst mode with pseudo-random data to simplify the measurement methodology. Care was taken to ensure proper power supply voltages during testing. During testing, all cables (if any) were manipulated to produce worst-case emissions. The handset (if any) was powered by a fully charged battery.

For the measurements, the EUT was attached to a plastic stand if necessary and placed on the wooden turntable. If the base unit attached to peripherals, they were connected and operational (as typical as possible).

The signal was maximized through rotation and placement in the three orthogonal axes. The antenna height and polarization were varied during the search for maximum signal level. The antenna height was varied from 1 to 4 meters. Detector function was in peak mode. Radiated emissions are taken at three meters unless the signal level was too low for measurement at that distance. If necessary, a pre-amplifier was used and/or the test was conducted at a closer distance.

The spectrum analyzer resolution bandwidth was approximately 1% of the EUT emission bandwidth, unless otherwise specified.

Radiated emission measurements were performed from the lowest radio frequency signal generated in the device which is greater than 9 kHz to the tenth harmonic of the highest fundamental frequency or to 40 GHz, whichever is lower.

As the base unit has 2 antennas, both have been checked. While conducting the test on one of antennas, another one was being disable its transmission. The data in this report represented the worst-case.

3.2 Conducted Emission Test Configuration

The setup and equipment setting were made in accordance with ANSI C63.17. The antenna of EUT transmitter was replaced by a coaxial cable. The impendence matching of connection, cable loss and external RF attenuator are taken into account. The EUT was arranged to communicate via a fixed carrier frequency between its transmitter and a companion device. The transmission was configured in burst mode with pseudo-random data as typical as normal operation.

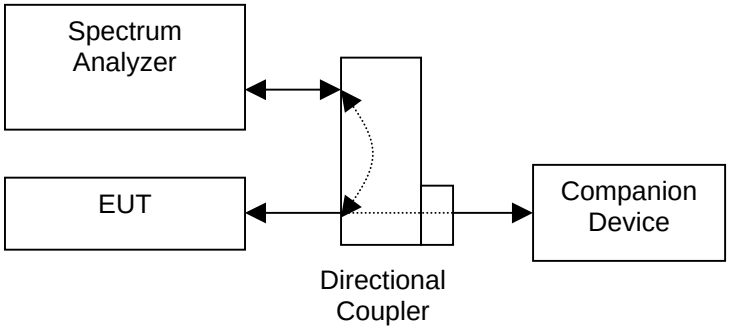

Figure 3.2.1

3.3 Conducted Monitoring and Operational Test Configuration

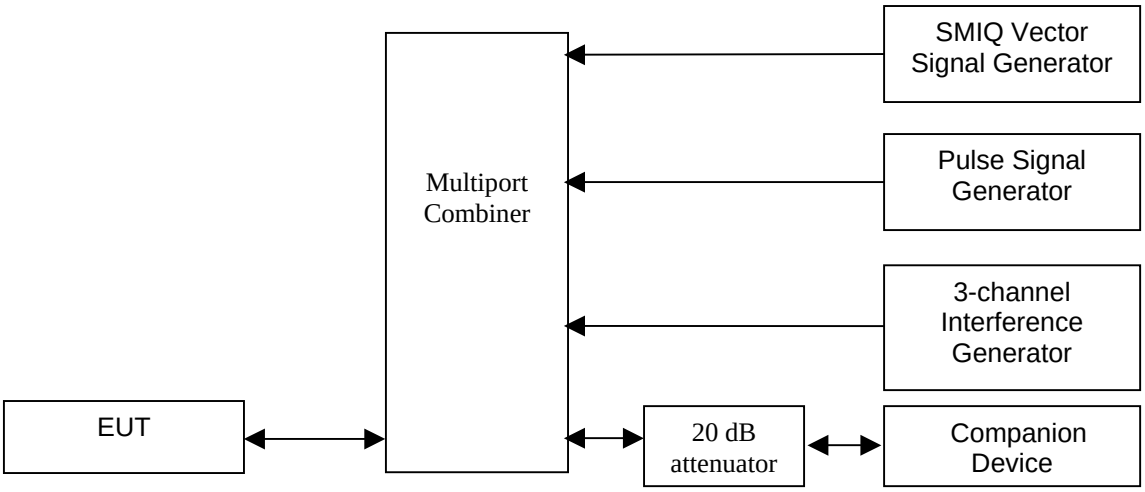

Figure 3.3.1

3.4 EUT Exercising Software

The EUT exercise program (if any) used during radiated and conducted testing was designed to exercise the various system components in a manner similar to a typical use.

3.5 Details of EUT and Description of Peripherals

Details of EUT:

An AC adaptor and/or a battery (provided with the unit) were used to power the device. Their description are listed below.

(1) Base Unit: An AC adaptor (117VAC to 6VDC 400mA, Model: U060040D) (Supplied by Client)
(2) Handset: A “Ni-MH” Type Rechargeable Battery Pack (2.4V 500mAh, 550mAh, 600mAh) (Supplied by Client)

Description of Peripherals:

(1) Telecommunication cable with RJ11C connectors (1m, unshielded), terminated (Supplied by Intertek)

3.6 Measurement Uncertainty

When determining of the test conclusion, the Measurement Uncertainty test has been considered.

3.7 Equipment Modification

Any modifications installed previous to testing by VTech Telecommunications Ltd. will be incorporated in each production model sold/leased in the United States.

No modifications were installed by Commercial and Electrical Division, Intertek Testing Services Hong Kong Ltd.

All the items listed under section 3.0 of this report are confirmed by:

Confirmed by:

Leung Wai Leung, Tommy
Senior Manager
Intertek Testing Services Hong Kong Ltd.
Agent for VTech Telecommunications Ltd.

_____Signature

February 27, 2008 _____Date

EXHIBIT 4
MEASUREMENT RESULTS

4.0 **Measurement Results**

4.1 Emission Bandwidth, FCC Rule 15.323(a):

Operation shall be contained within the 1920 – 1930 MHz band. The emission bandwidth (*B*) shall be less than 2.5 MHz and greater than 50 kHz.

Measurements are made in accordance with ANSI C63.17 sub-clause 6.1.3. Test setup is shown in section 3.2 Figure 3.2.1.

Test Results:

I. Traffic Carrier - Base Unit

Channel	Channel Frequency (MHz)	Measuring Signal Level	Measured Emission Bandwidth (MHz)	Results
Lowest	1921.536	26 dB down	1.52	Pass
Highest	1928.448	26 dB down	1.50	Pass

II. Dummy Carrier - Base Unit

Channel	Channel Frequency (MHz)	Measuring Signal Level	Measured Emission Bandwidth (MHz)	Results
Lowest	1921.536	26 dB down	1.45	Pass
Highest	1928.448	26 dB down	1.43	Pass

III. Traffic Carrier - Handset

Channel	Channel Frequency (MHz)	Measuring Signal Level	Measured Emission Bandwidth (MHz)	Results
Lowest	1921.536	26 dB down	1.50	Pass
Highest	1928.448	26 dB down	1.47	Pass

Please refer to the attached plots for more details:

Base Unit
Plot B1A: Lowest Channel 26dB Emission Bandwidth (Traffic Carrier)
Plot B1D: Highest Channel 26dB Emission Bandwidth (Traffic Carrier)
Plot B1G: Lowest Channel 26dB Emission Bandwidth (Dummy Carrier)
Plot B1J: Highest Channel 26dB Emission Bandwidth (Dummy Carrier)

Handset
Plot H1A: Lowest Channel 26dB Emission Bandwidth (Traffic Carrier)
Plot H1D: Highest Channel 26dB Emission Bandwidth (Traffic Carrier)

The plots of emission bandwidth and test frequency are saved as filename: 26bw.pdf

4.2 Peak Transmit Power, FCC Rule 15.319(c):

The peak transmit power (P_{EUT}) shall not exceed 100μW multiplied by the square root of the emission bandwidth (B) in Hz or 5 $\log_{10} B$ – 10 dBm. The peak transmit power shall be reduced by the amount in dB that the maximum directional gain of the antenna exceeds 3 dBi.

Measurements are made in accordance with ANSI C63.17 sub-clause 6.1.2. Test setup is shown in section 3.2 Figure 3.2.1. The cable loss and/or external attenuation are included in OFFSET function of spectrum analyzer.

Calculation of Peak Transmit Power Limit (P_{max}):

[×] $P_{max} = 5 \log_{10} B - 10$ dBm when $G_A \leq 3$dBi

[ ] $P_{max} = 5 \log_{10} B - 10$ dBm – (G_A – 3dBi) when $G_A > 3$dBi

Where G_A = EUT Antenna Gain: 0 dBi for Base Unit
0 dBi for Handset

Test Results:

I. Traffic Carrier - Base Unit

Channel	Channel Frequency (MHz)	Measured Peak Transmit Power (dBm)	Limit (dBm)	Results
Lowest	1921.536	19.78	20.91	Pass
Highest	1928.448	19.68	20.88	Pass

II. Dummy Carrier - Base Unit

Channel	Channel Frequency (MHz)	Measured Peak Transmit Power (dBm)	Limit (dBm)	Results
Lowest	1921.536	19.78	20.81	Pass
Highest	1928.448	19.68	20.78	Pass

4.2 Peak Transmit Power, FCC Rule 15.319(c): - Continued

III. Traffic Carrier - Handset

Channel	Channel Frequency (MHz)	Measured Peak Transmit Power (dBm)	Limit (dBm)	Results
Lowest	1921.536	20.26	20.88	Pass
Highest	1928.448	20.17	20.84	Pass

Please refer to the attached plots for more details:

Base Unit
Plot B2A: Lowest Channel Peak Transmit Power (Traffic Carrier)
Plot B2B: Highest Channel Peak Transmit Power (Traffic Carrier)
Plot B2C: Lowest Channel Peak Transmit Power (Dummy Carrier)
Plot B2D: Highest Channel Peak Transmit Power (Dummy Carrier)

Handset:
Plot H2A: Lowest Channel Peak Transmit Power (Traffic Carrier)
Plot H2B: Highest Channel Peak Transmit Power (Traffic Carrier)

The plots of peak transmit power are saved as filename: peaktp.pdf

4.3 Unwanted Emission Inside the Sub-Band, FCC Rule 15.323(d):

Emissions inside the sub-band must comply with the following emission mask:

1. In the bands between 1*B* and 2*B* measured from the center of the emission bandwidth, emission shall be at least 30 dB below the permitted peak transmit power; i.e.-9.5 dBm

2. In the bands between 2*B* and 3*B* measured from the center of the emission bandwidth, emission shall be at least 50 dB below the permitted peak transmit power; i.e. -29.5 dBm

3. In the bands between 3*B* and the band edge, emission shall be at least 60 dB below the permitted peak transmit power. i.e. -39.5 dBm

Where *B* = emission bandwidth in Hz

Measurements are made in accordance with ANSI C63.17 sub-clause 6.1.6.1. Test setup is shown in section 3.2 Figure 3.2.1.

Test Results:

I. Traffic Carrier - Base Unit

Channel	Channel Frequency (MHz)	Results
Lowest	1921.536	Pass
Highest	1928.448	Pass

II. Dummy Carrier - Base Unit

Channel	Channel Frequency (MHz)	Results
Lowest	1921.536	Pass
Highest	1928.448	Pass

III. Traffic Carrier - Handset

Channel	Channel Frequency (MHz)	Results
Lowest	1921.536	Pass
Highest	1928.448	Pass

4.3 Unwanted Emission Inside the Sub-Band, FCC Rule 15.323(d): - Continued

Please refer to the attached plots for more details:

Base Unit
Plot B4A: Lowest Channel Unwanted Emission Inside the Sub-Band (Traffic Carrier)
Plot B4B: Highest Channel Unwanted Emission Inside the Sub-Band (Traffic Carrier)
Plot B4C: Lowest Channel Unwanted Emission Inside the Sub-Band (Dummy Carrier)
Plot B4D: Highest Channel Unwanted Emission Inside the Sub-Band (Dummy Carrier)

Handset:
Plot H4A: Lowest Channel Unwanted Emission Inside the Sub-Band (Traffic Carrier)
Plot H4B: Highest Channel Unwanted Emission Inside the Sub-Band (Traffic Carrier)

The plots of the unwanted emission inside the sub-band are saved as filename: inband.pdf

4.4 Emissions Outside the Sub-Band, FCC Rule 15.323(d):

Emissions outside the sub-band shall be attenuated below a reference power of 112 mW (20.5 dBm) as follows:

1. 30 dB between the band edge and 1.25 MHz above or below the band;
2. 50 dB between 1.25 and 2.5 MHz above or below the band; and
3. 60 dB at 2.5 MHz or greater above or below the band, or shall not exceed the limits of FCC Rule 15.209.

Example: Calculation of Limit for emissions between the band edge and 1.25 MHz (1920.000 – 1918.750 MHz)

The emissions shall not exceed the Limit: 20.5 dBm – 30 dB = -9.5 dBm

Measurements are made in accordance with ANSI C63.17 sub-clause 6.1.6.2. As EUT has non-detachable antenna(s), radiated emissions test method is used for out-of-band emissions tests. Emissions that are directly caused by digital circuits in the transmit path and transmitter portion are measured. Test setup and procedures are described in section 3.2 Figure 3.2.1.

Test Results:

Base Unit & Handset:

Channel	Carrier Frequency (MHz)	Measured Band (MHz)	Limit (dBm)	Results
Lowest	1921.536	1920.000 - 1918.750	-9.5	Pass
		1918.750 - 1917.500	-29.5	Pass
		0.009 - 1917.500 & 1932.500 - 19300.000	-39.5 / FCC Rule 15.209	Pass
Highest	1928.448	1930.000 - 1931.250	-9.5	Pass
		1931.250 - 1932.500	-29.5	Pass
		0.009 - 1917.500 & 1932.500 - 19300.000	-39.5 / FCC Rule 15.209	Pass

Please refer to the section 4.6.1 to 4.6.4 for more details.

Company: VTech Telecommunications Ltd. Date of Test: February 14-20, 2008
Model: LS6117
Mode: Transmission

4.4.1 Radiated Emissions Configuration Photographs:

Worst Case Radiated Emission
at

Base Unit: 7686.144 MHz & 7713.792MHz

Handset: 7686.144 MHz

The worst case radiated emission configuration photographs are saved as filename: config photos.doc.

Company: VTech Telecommunications Ltd. Date of Test: February 14-20, 2008
Model: LS6117
Mode: Transmission

4.4.2 Radiated Emissions Data:

Data are included of the worst case configuration (the configuration which resulted in the highest emission levels). A sample calculation, configuration photographs and data tables of the emissions are included. All measurements were performed with peak detection unless otherwise specified.

The data in tables 1-10 list the significant emission frequencies, the limit and the margin of compliance.

Judgement -

Base Unit: Passed by 5.1 dB margin compare with the average limit

Handset: Passed by 7.2 dB margin compare with the peak limit

TEST ENGINEER:

Signature

Ken Sit, Supervisor
Typed/Printed Name

February 27, 2008
Date

Company: VTech Telecommunications Ltd. Date of Test: February 14-20, 2008
Model: LS6117
Mode: Transmission

Table 1, Base Unit

Radiated Emissions Data
Pursuant To FCC Part 15 Section 15.323 (d) Emissions Requirements

Lowest Channel:

Polarization	Frequency (MHz)	Measured Power (dBm)	Power Limit (dBm)	Margin (dB)
V	1919.821	-46.6	-9.5	-37.1
V	1918.385	-50.6	-29.5	-21.1
V	1917.103	-52.0	-39.5	-12.5

NOTES:

1. Peak detector is used for the emission measurement.

2. All measurements were made at 3 meters.

3. Negative value in the margin column shows emission below limit.

Company: VTech Telecommunications Ltd. Date of Test: February 14-20, 2008
Model: LS6117
Mode: Transmission

Table 2, Base Unit

Radiated Emissions Data
Pursuant To FCC Part 15 Section 15.209 Emissions Requirements

Lowest Channel:

Polari-zation	Frequency (MHz)	Reading (dBμV)	Pre-Amp Gain (dB)	Antenna Factor (dB)	Net at 3m - Peak (dBμV/m)	Average Factor (dB)	Calculated at 3m (dBμV/m)	Average Limit at 3m (dBμV/m)	Margin (dB)
V	3843.072	64.2	33	33.3	64.5	15.9	48.6	54.0	-5.4
V	5764.608	59.0	33	36.6	62.6	15.9	46.7	54.0	-7.3
V	7686.144	58.9	33	38.9	64.8	15.9	48.9	54.0	-5.1
V	9607.680	46.0	33	40.4	53.4	15.9	37.5	54.0	-16.5
V	11529.216	43.1	33	40.5	50.6	15.9	34.7	54.0	-19.3

Polari-zation	Frequency (MHz)	Reading (dBμV)	Pre-Amp Gain (dB)	Antenna Factor (dB)	Net at 3m - Peak (dBμV/m)	Peak Limit at 3m (dBμV/m)	Margin (dB)
V	3843.072	64.2	33	33.3	64.5	74.0	-9.5
V	5764.608	59.0	33	36.6	62.6	74.0	-11.4
V	7686.144	58.9	33	38.9	64.8	74.0	-9.2
V	9607.680	46.0	33	40.4	53.4	74.0	-20.6
V	11529.216	43.1	33	40.5	50.6	74.0	-23.4

NOTES:

1. Peak detector is used for the emission measurement over 1000 MHz.

2. All measurements were made at 3 meters.

3. Negative value in the margin column shows emission below limit.

Company: VTech Telecommunications Ltd. Date of Test: February 14-20, 2008
Model: LS6117
Mode: Transmission

Table 3, Base Unit

Radiated Emissions Data
Pursuant To FCC Part 15 Section 15.323 (d) Emissions Requirements

Highest Channel:

Polarization	Frequency (MHz)	Measured Power (dBm)	Power Limit (dBm)	Margin (dB)
V	1930.014	-46.7	-9.5	-37.2
V	1931.268	-50.7	-29.5	-21.2
V	1933.085	-51.6	-39.5	-12.1

NOTES:

1. Peak detector is used for the emission measurement.

2. All measurements were made at 3 meters.

3. Negative value in the margin column shows emission below limit.

Company: VTech Telecommunications Ltd. Date of Test: February 14-20, 2008
Model: LS6117
Mode: Transmission

Table 4, Base Unit

Radiated Emissions Data
Pursuant To FCC Part 15 Section 15.209 Emissions Requirements

Highest Channel:

Polari-zation	Frequency (MHz)	Reading (dBμV)	Pre-Amp Gain (dB)	Antenna Factor (dB)	Net at 3m - Peak (dBμV/m)	Average Factor (dB)	Calculated at 3m (dBμV/m)	Average Limit at 3m (dBμV/m)	Margin (dB)
V	3856.896	64.1	33	33.3	64.4	15.9	48.5	54.0	-5.5
V	5785.344	59.0	33	36.6	62.6	15.9	46.7	54.0	-7.3
V	7713.792	58.9	33	38.9	64.8	15.9	48.9	54.0	-5.1
V	9642.240	45.8	33	40.4	53.2	15.9	37.3	54.0	-16.7
V	11570.688	43.4	33	40.5	50.9	15.9	35.0	54.0	-19.0

Polari-zation	Frequency (MHz)	Reading (dBμV)	Pre-Amp Gain (dB)	Antenna Factor (dB)	Net at 3m - Peak (dBμV/m)	Peak Limit at 3m (dBμV/m)	Margin (dB)
V	3856.896	64.1	33	33.3	64.4	74.0	-9.6
V	5785.344	59.0	33	36.6	62.6	74.0	-11.4
V	7713.792	58.9	33	38.9	64.8	74.0	-9.2
V	9642.240	45.8	33	40.4	53.2	74.0	-20.8
V	11570.688	43.4	33	40.5	50.9	74.0	-23.1

NOTES:

1. Peak detector is used for the emission measurement over 1000 MHz.

2. All measurements were made at 3 meters.

3. Negative value in the margin column shows emission below limit.

Company: VTech Telecommunications Ltd. Date of Test: February 14-20, 2008
Model: LS6117
Mode: Talking

Table 5, Base Unit

Radiated Emissions Data
Pursuant To FCC Part 15 Section 15.323 (d) Emissions Requirements

Polarization	Frequency (MHz)	Measured Power (dBm)	Power Limit (dBm)	Margin (dB)
V	41.475	-65.0	-39.5	-25.5
V	82.950	-63.9	-39.5	-24.4
H	124.425	-63.5	-39.5	-24.0
H	165.900	-63.3	-39.5	-23.8
H	207.375	-65.0	-39.5	-25.5
H	248.850	-65.4	-39.5	-25.9

NOTES:

1. Peak detector is used for the emission measurement.

2. All measurements were made at 3 meters.

3. Negative value in the margin column shows emission below limit.

Company: VTech Telecommunications Ltd. Date of Test: February 14-20, 2008
Model: LS6117
Mode: Transmission

Table 6, Handset

Radiated Emissions Data
Pursuant To FCC Part 15 Section 15.323 (d) Emissions Requirements

Lowest Channel:

Polarization	Frequency (MHz)	Measured Power (dBm)	Power Limit (dBm)	Margin (dB)
V	1919.821	-46.6	-9.5	-37.1
V	1918.385	-49.8	-29.5	-20.3
V	1917.102	-52.0	-39.5	-12.5

NOTES:

1. Peak detector is used for the emission measurement.

2. All measurements were made at 3 meters.

3. Negative value in the margin column shows emission below limit.

Company: VTech Telecommunications Ltd. Date of Test: February 14-20, 2008
Model: LS6117
Mode: Transmission

Table 7, Handset

Radiated Emissions Data
Pursuant To FCC Part 15 Section 15.209 Emissions Requirements

Lowest Channel:

Polari-zation	Frequency (MHz)	Reading (dBμV)	Pre-Amp Gain (dB)	Antenna Factor (dB)	Net at 3m - Peak (dBμV/m)	Average Factor (dB)	Calculated at 3m (dBμV/m)	Average Limit at 3m (dBμV/m)	Margin (dB)
V	3843.072	65.0	33	33.3	65.3	28.4	36.9	54.0	-17.1
V	5764.608	57.7	33	36.6	61.3	28.4	32.9	54.0	-21.1
V	7686.144	60.9	33	38.9	66.8	28.4	38.4	54.0	-15.6
V	9607.680	45.8	33	40.4	53.2	28.4	24.8	54.0	-29.2
V	11529.216	44.1	33	40.5	51.6	28.4	23.2	54.0	-30.8

Polari-zation	Frequency (MHz)	Reading (dBμV)	Pre-Amp Gain (dB)	Antenna Factor (dB)	Net at 3m - Peak (dBμV/m)	Peak Limit at 3m (dBμV/m)	Margin (dB)
V	3843.072	65.0	33	33.3	65.3	74.0	-8.7
V	5764.608	57.7	33	36.6	61.3	74.0	-12.7
V	7686.144	60.9	33	38.9	66.8	74.0	-7.2
V	9607.680	45.8	33	40.4	53.2	74.0	-20.8
V	11529.216	44.1	33	40.5	51.6	74.0	-22.4

NOTES:

1. Peak detector is used for the emission measurement over 1000 MHz.

2. All measurements were made at 3 meters.

3. Negative value in the margin column shows emission below limit.

Company: VTech Telecommunications Ltd. Date of Test: February 14-20, 2008
Model: LS6117
Mode: Transmission

Table 8, Handset

Radiated Emissions Data
Pursuant To FCC Part 15 Section 15.323 (d) Emissions Requirements

Highest Channel:

Polarization	Frequency (MHz)	Measured Power (dBm)	Power Limit (dBm)	Margin (dB)
V	1930.014	-47.0	-9.5	-37.5
V	1931.265	-49.9	-29.5	-20.4
V	1933.086	-51.6	-39.5	-12.1

NOTES:

1. Peak detector is used for the emission measurement.

2. All measurements were made at 3 meters.

3. Negative value in the margin column shows emission below limit.

Company: VTech Telecommunications Ltd. Date of Test: February 14-20, 2008
Model: LS6117
Mode: Transmission

Table 9, Handset

Radiated Emissions Data
Pursuant To FCC Part 15 Section 15.209 Emissions Requirements

Highest Channel:

Polari-zation	Frequency (MHz)	Reading (dBμV)	Pre-Amp Gain (dB)	Antenna Factor (dB)	Net at 3m - Peak (dBμV/m)	Average Factor (dB)	Calculated at 3m (dBμV/m)	Average Limit at 3m (dBμV/m)	Margin (dB)
V	3856.896	64.8	33	33.3	65.1	28.4	36.7	54.0	-17.3
V	5785.344	57.8	33	36.6	61.4	28.4	33.0	54.0	-21.0
V	7713.792	60.3	33	38.9	66.2	28.4	37.8	54.0	-16.2
V	9642.240	45.0	33	40.4	52.4	28.4	24.0	54.0	-30.0
V	11570.688	43.9	33	40.5	51.4	28.4	23.0	54.0	-31.0

Polari-zation	Frequency (MHz)	Reading (dBμV)	Pre-Amp Gain (dB)	Antenna Factor (dB)	Net at 3m - Peak (dBμV/m)	Peak Limit at 3m (dBμV/m)	Margin (dB)
V	3856.896	64.8	33	33.3	65.1	74.0	-8.9
V	5785.344	57.8	33	36.6	61.4	74.0	-12.6
V	7713.792	60.3	33	38.9	66.2	74.0	-7.8
V	9642.240	45.0	33	40.4	52.4	74.0	-21.6
V	11570.688	43.9	33	40.5	51.4	74.0	-22.6

NOTES:

1. Peak detector is used for the emission measurement over 1000 MHz.

2. All measurements were made at 3 meters.

3. Negative value in the margin column shows emission below limit.

Company: VTech Telecommunications Ltd. Date of Test: February 14-20, 2008
Model: LS6117
Mode: Talking

Table 10, Handset

Radiated Emissions Data
Pursuant To FCC Part 15 Section 15.323 (d) Emissions Requirements

Polarization	Frequency (MHz)	Measured Power (dBm)	Power Limit (dBm)	Margin (dB)
V	41.475	-64.8	-39.5	-25.3
V	82.950	-64.0	-39.5	-24.5
H	124.425	-63.5	-39.5	-24.0
H	165.900	-64.8	-39.5	-25.3
H	207.375	-65.0	-39.5	-25.5
H	248.850	-63.8	-39.5	-24.3
H	290.325	-64.9	-39.5	-25.4
H	331.900	-65.8	-39.5	-26.3

NOTES:

1. Peak detector is used for the emission measurement.

2. All measurements were made at 3 meters.

3. Negative value in the margin column shows emission below limit.

4.4.3 Field Strength Calculation

The field strength is calculated by adding the reading on the Spectrum Analyzer to the factors associated with preamplifiers (if any), antennas, cables, pulse desensitization and average factors (when specified limit is in average and measurements are made with peak detectors). A sample calculation is included below.

FS = RA + AF + CF - AG + PD + AV

Where FS = Field Strength in dBμV/m
RA = Receiver Amplitude (including preamplifier) in dBμV
CF = Cable Attenuation Factor in dB
AF = Antenna Factor in dB
AG = Amplifier Gain in dB
PD = Pulse Desensitization in dB
AV = Average Factor in -dB

In the radiated emission table which follows, the reading shown on the data table may reflect the preamplifier gain. An example of the calculations, where the reading does not reflect the preamplifier gain, follows:

FS = RA + AF + CF - AG + PD + AV

<u>Example</u>
Assume a receiver reading of 62.0 dBμV is obtained. The antenna factor of 7.4 dB and cable factor of 1.6 dB is added. The amplifier gain of 29.0 dB is subtracted. The pulse desensitization factor of the spectrum analyzer is 0.0 dB, and the resultant average factor is -10.0 dB. The net field strength for comparison to the appropriate emission limit is 32.0 dBμV/m. This value in dBμV/m is converted to its corresponding level in μV/m.

RA = 62.0 dBμV
AF = 7.4 dB
CF = 1.6 dB
AG = 29.0 dB
PD = 0.0 dB
AV = -10 dB

FS = 62.0 + 7.4 + 1.6 – 29.0 + 0.0 + (-10.0) = 32.0 dBμV/m

Level in mV/m = Common Antilogarithm [(32.0 dBμV/m)/20] = 39.8 μV/m

4.4.4 Transmitter Duty Cycle Calculation and Measurements, FCC Rule 15.35(b), (c)

The EUT antenna output port was connected to the input of the spectrum analyzer. The analyzer center frequency was set to EUT RF channel carrier. The SWEP function on the analyzer was set to ZERO SPAN. The transmitter ON time was determined from the resultant time-amplitude display:

Base Unit: (Four handsets, single-slot operation with dummy)

Duty cycle (DC) = Maximum ON time in 10ms/10ms
= (4 x 1 x 0.376ms + 0.088ms)/10ms

Average Factor (AF), dB = 20* log (DC)
= 20* log (0.1592)
= -15.9 dB

X	See attached spectrum analyzer chart (s) for transmitter timing Base Unit: Plot D71 (Base Dummy), Plot B71 (Base Traffic)
	See transmitter timing diagram provided by manufacturer
	Not applicable, duty cycle was not used.

Handset: (single-slot operation)

Duty cycle (DC) = Maximum ON time in 10ms/10ms
= (1 x 0.376ms)/10ms

Average Factor (AF), dB = 20* log (DC)
= 20* log (0.0376)
= -28.4 dB

X	See attached spectrum analyzer chart (s) for transmitter timing Handset: Plot H71 (Handset Traffic)
	See transmitter timing diagram provided by manufacturer
	Not applicable, duty cycle was not used.

For electronic filing, the above plot is saved with filenames: dcc.pdf

4.5 AC Power Lines Conducted Emissions from Transmitter portion of EUT, FCC Rule 15.315:

The AC power lines conducted emission shall not exceed the limits of FCC Rule 15.207.

Measurements are made in accordance with ANSI C63.4 sub-clause 7. Emissions that are directly caused by digital circuits in the transmit path and transmitter portion are measured.

[ ] Not applicable – EUT is only powered by battery for operation.

[×] EUT connects to AC power lines. Emission Data are listed in following pages. Please refer to the section 4.5.1 to 4.5.2 for more details.

Company: VTech Telecommunications Ltd. Date of Test: February 14-20, 2008
Model: LS6117
Mode: Talk

4.5.1 AC Power Lines Conducted Emissions Configuration Photographs:

Worst Case AC Power Line Conducted Emission

The worst case AC power Line conducted emission configuration photographs are saved as filename: config photos.doc

Company: VTech Telecommunications Ltd. Date of Test: February 14-20, 2008
Model: LS6117
Mode: Talk

4.5.2 AC Power Line Conducted Emissions Data:

The data on the following pages list the significant emission frequencies, the limit, and the margin of compliance.

Judgment: Passed by more than 20 dB margin

The worst case AC power line conducted emission data are saved as filename: conduct.pdf

TEST ENGINEER:

Signature

Ken Sit, Supervisor
Typed/Printed Name

February 27, 2008
Date

4.6 Radiated Emissions from Computing Device Peripheral Portion of EUT, FCC Rule 15.109(a):

EUT includes computing device peripheral circuitry and is subject to the requirements of FCC Part 15 Subpart B. The radiated emission shall not exceed the limits of FCC Rule 15.109(a).

Measurements are made in accordance with ANSI C63.4 sub-clause 8 and section 3.1. Radiated emissions shall be measured with EUT operating in typical operation modes. The spectrum analyzer resolution bandwidth was 100 kHz or greater for frequencies below 1000 MHz.

[×] Not applicable – No computing device peripheral

[ ] The computing device peripheral portion of EUT is subject to FCC Part 15 Subpart B, Certification. Please refer to the section 4.9.1 for more details.

[ ] The computing device peripheral portion of EUT is subject to FCC Part 15 Subpart B, DoC. Emission Data are included in the separated DoC report.

4.7 AC Power Lines Conducted Emissions from Computing Device Peripheral Portion of EUT, FCC Rule 15.107(a):

EUT includes computing device peripheral and is subject to the requirements of FCC Part 15 Subpart B. The AC power lines conducted emission shall not exceed the limits of FCC Rule 15.107(a).

Measurements are made in accordance with ANSI C63.4 sub-clause 7. Conducted emissions shall be measured with EUT operating in typical operation modes.

[×] Not applicable – No computing device peripheral

[ ] The computing device peripheral portion of EUT is subject to FCC Part 15 Subpart B, Certification. Please refer to the section 4.10.1 for more details.

[ ] The computing device peripheral portion of EUT is subject to FCC Part 15 Subpart B, DoC. Emission Data are included in the separated DoC report.

4.8 Radio Frequency Radiation Exposure, FCC Rule 15.319(i):

EUT is subject to the radio frequency exposure requirements specified in FCC Rule §§ 1.1307(b), 2.1091 and 2.1093. It shall be considered to operate in a “general population / uncontrolled” environment.

[×] Handset Unit: EUT was evaluated for Specific Absorption Rate (SAR) evaluation compliance according to OET Bulletin 65, Supplement C (Edition 01-01). It is in compliance with the SAR evaluation requirements. The caution statement specified in the user manual. A SAR test report was submitted at the same time and saved as SAR report 1 of 2.pdf and SAR report 2 of 2.pdf

[×] Base Unit: EUT was evaluated for Maximum Permissible Exposure (MPE) evaluation compliance according to OET Bulletin 65, Supplement C (Edition 01-01). The evaluation calculation results are saved as filename: RF exposure info.pdf.

4.9 Frame Jitter, FCC Rule 15.323(e):

The frame period (a set of consecutive time slots in which the position of each time slot can be identified by reference to a synchronizing source) of EUT operating in these sub-bands shall be 20 ms or 10 ms/X where X is a positive whole number.

The jitter (time-related, abrupt, spurious variations in the duration of the frame interval) introduced at the two ends of such a communication link shall not exceed 25 μs for any two consecutive transmissions. Transmissions shall be continuous in every time and spectrum window during the frame period defined for EUT.

Measurements are made in accordance with ANSI C63.17 sub-clause 6.2.3. Test setup is shown in section 3.2 Figure 3.2.1. A spectrum analyzer measures the time duration between the rising edges of two consecutive frames. The measurements are taken over 100,000 frames. These measurement values are used to compute mean value and the difference between any two consecutive frame periods. The mean value is the frame period.

Test Results:

I. Jitter - Base Unit

Measured Maximum Jitter (μs)	Limit (μs)	Results
-0.1931	±25	Pass

II. Jitter - Handset

Measured Maximum Jitter (μs)	Limit (μs)	Results
-0.2731	±25	Pass

EXHIBIT 5
EQUIPMENT PHOTOGRAPHS

5.0 **Equipment Photographs**

The photographs are saved as filename: external photos.doc & internal photos.doc

EXHIBIT 6
PRODUCT LABELLING

6.0 **Product Labelling**

The FCC ID label artwork and its location are saved as filename: label.pdf

The label location justification letter is saved as filename: justification.pdf

EXHIBIT 7
TECHNICAL SPECIFICATIONS

7.0 **Technical Specifications**

The block diagram and circuit diagram are saved as filename: block.pdf and circuit.pdf respectively.

EXHIBIT 8
INSTRUCTION MANUAL

8.0 **Instruction Manual**

A preliminary copy of the Instruction Manual is saved as filename: manual.pdf

The required FCC Information to the User is stated on P.46 of Instruction Manual.

This manual will be provided to the end-user with each unit sold/leased in the United States.

EXHIBIT 9
SECURITY CODE INFORMATION

9.0 **Security Code Information**

The Security Code Information is saved as filename: security code information.pdf

EXHIBIT 10
UTAM Affidavit

10.0 **UTAM Affidavit**

A copy of the UTAM affidavit is saved as filename: utam.pdf

EXHIBIT 11
LETTER OF AGENCY

11.0 **Letter of Agency**

A copy of the Letter of Agency is saved as filename: letter of agency.pdf

EXHIBIT 12
CONFIDENTIALITY REQUEST

12.0 **Confidentiality Request**

A copy of the Confidentiality Request is saved as filename: request.pdf