CS2111 Engraving artwork

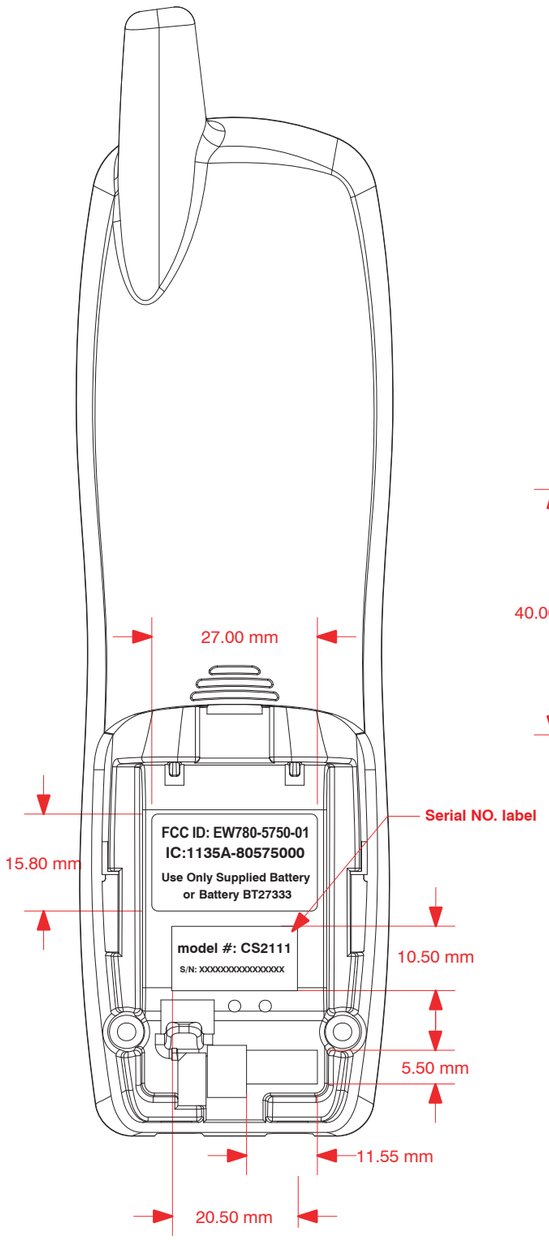

HS

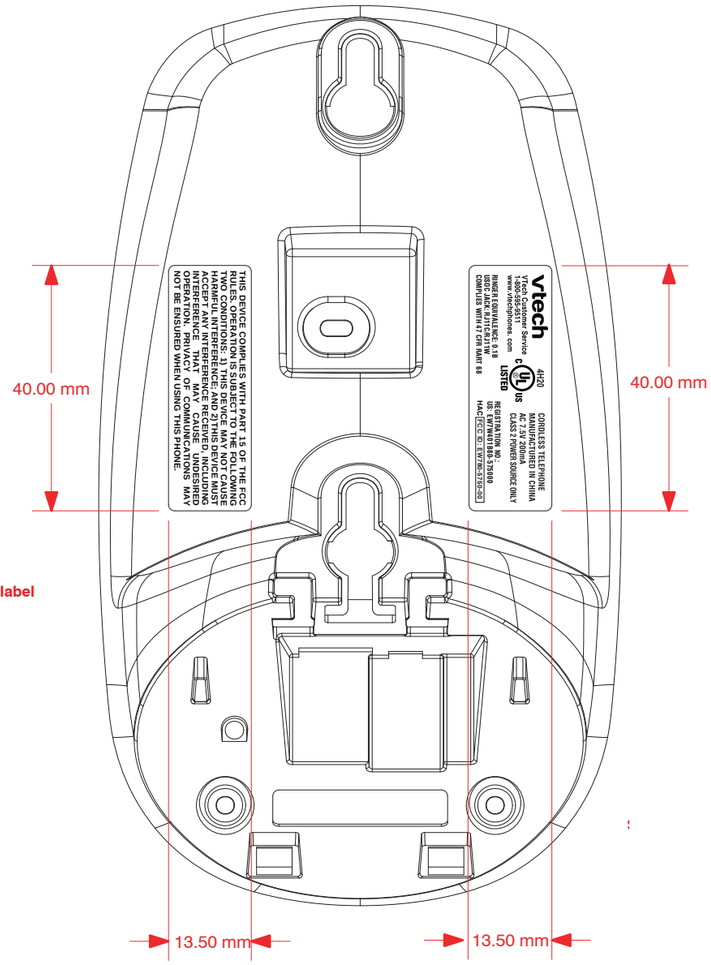

BS(VIEW 1)