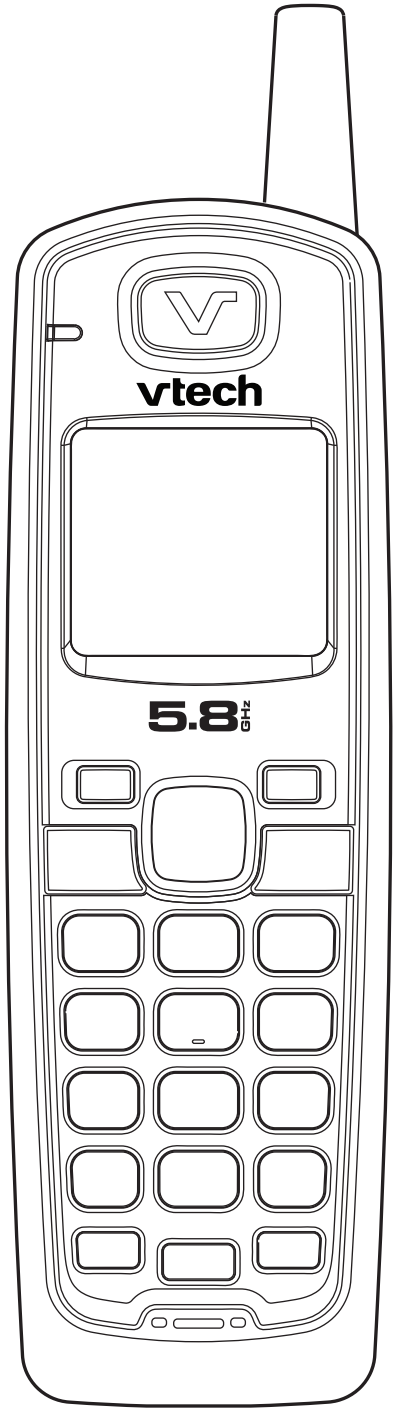

HS FRONT
(For CS51XX)

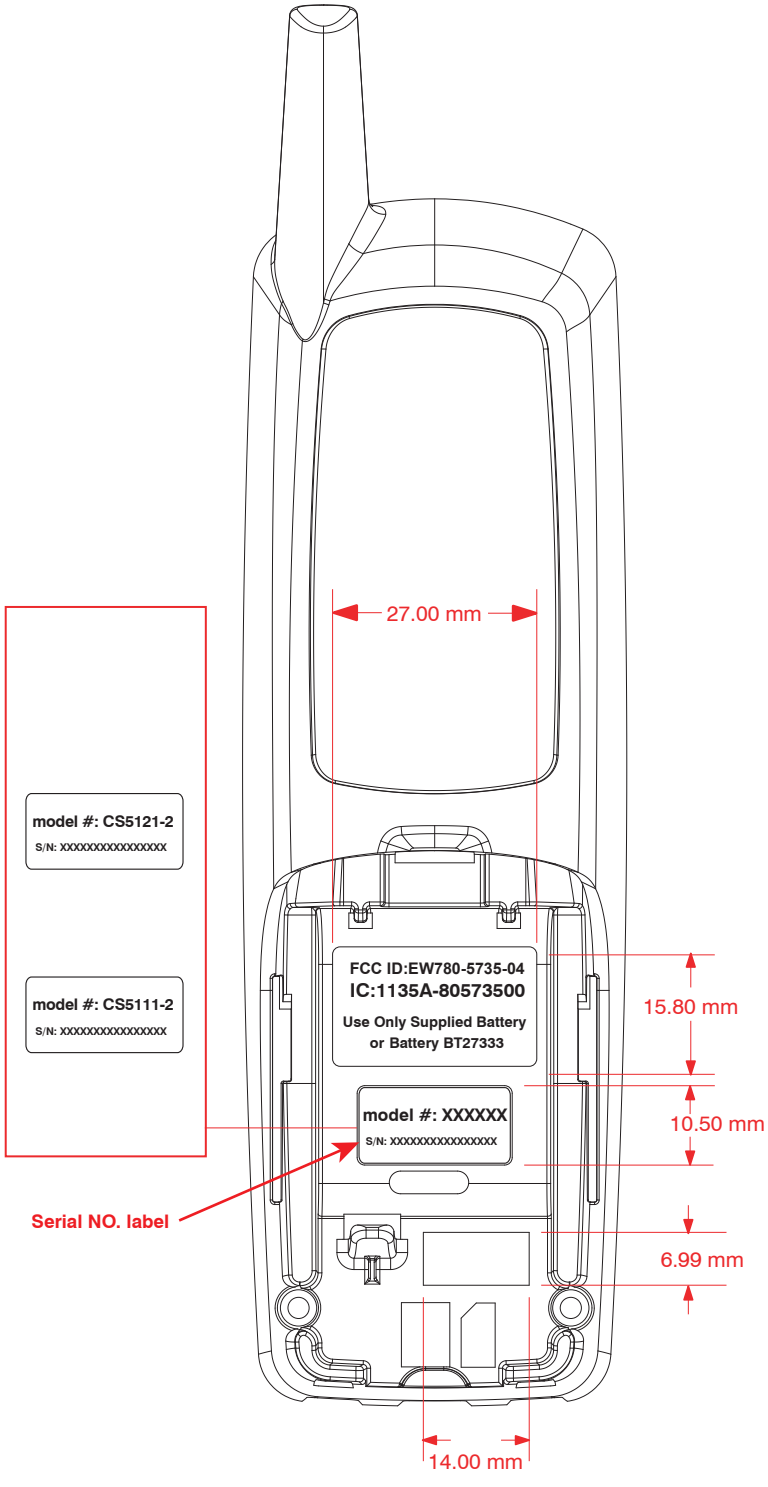

HS Rear
(For cs5111/cs5111-2
cs5121/cs5121-2
cs5121-3/cs5121-4)