ia 5851 engraving

HS

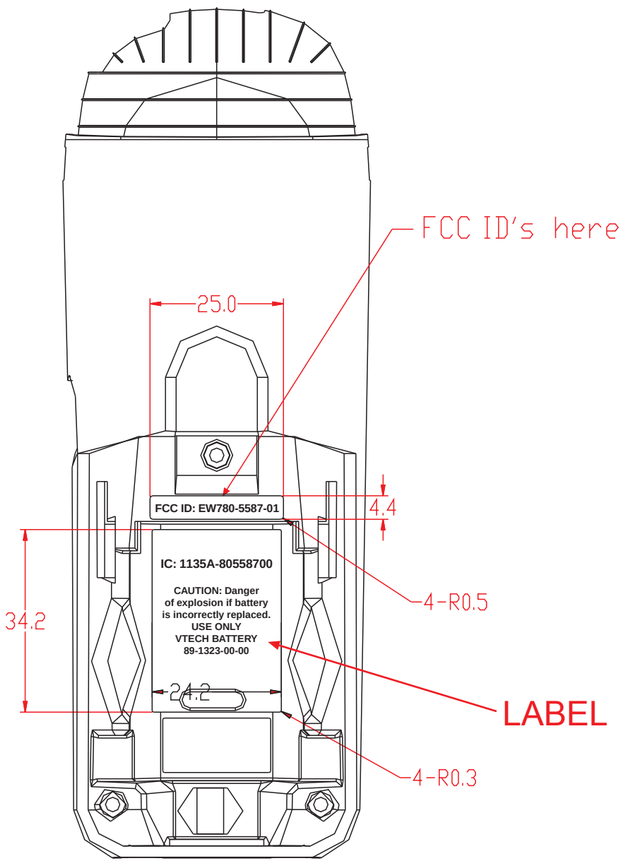
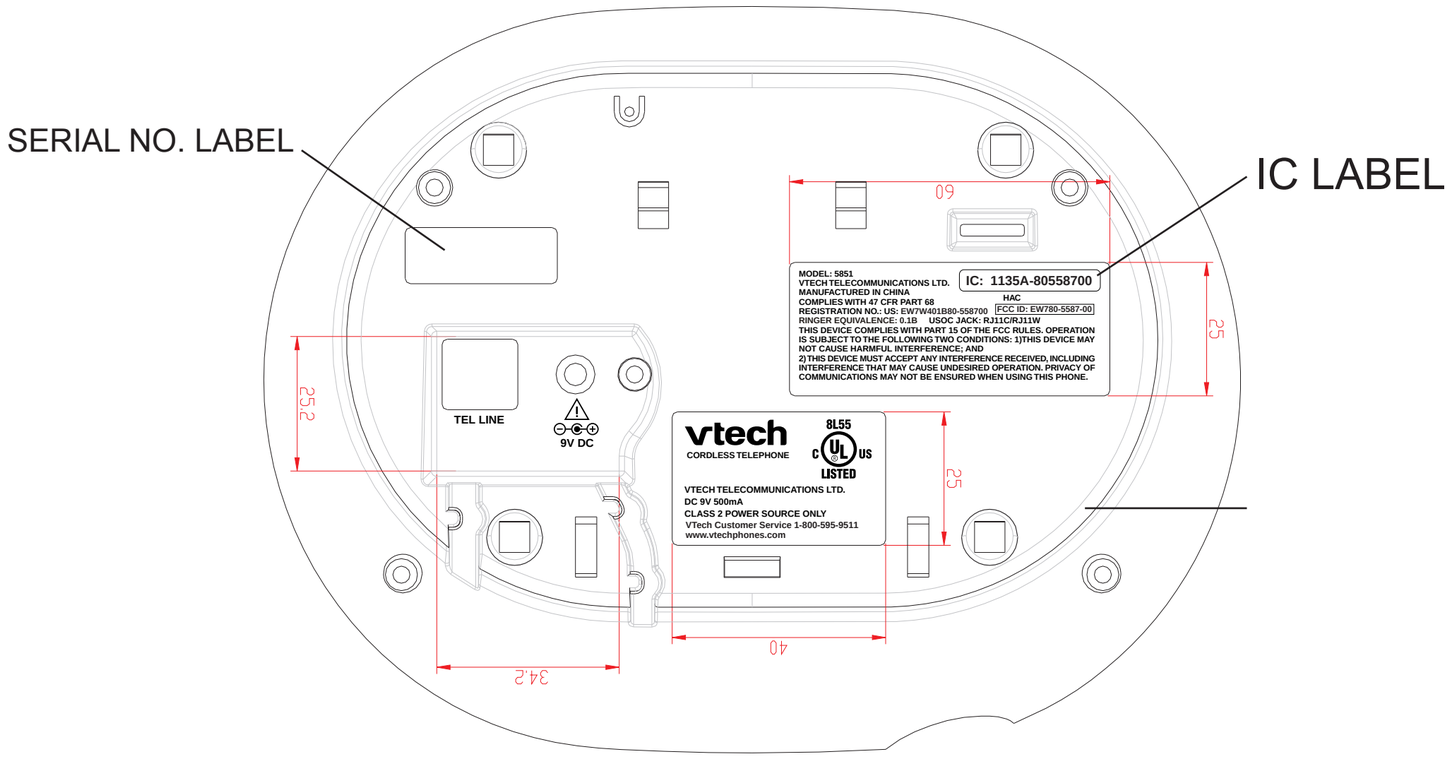
BS