VM929HQ / VM929-2HQ
928 plus / 928 plus Twin
Advanced HQ Max / Advanced HQ Max Twin
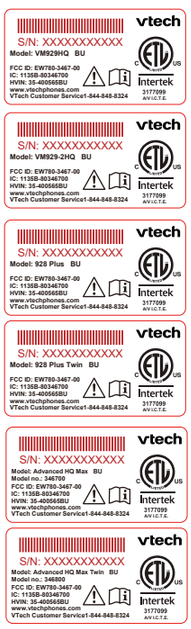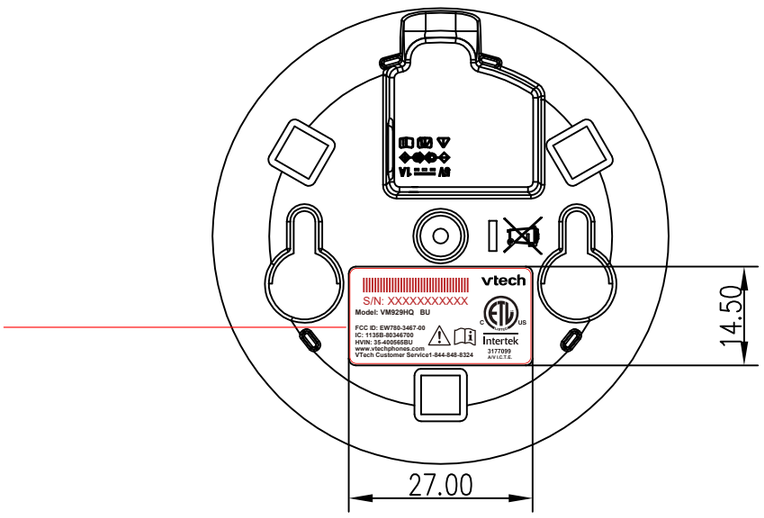
BU Label
26.6X14mm