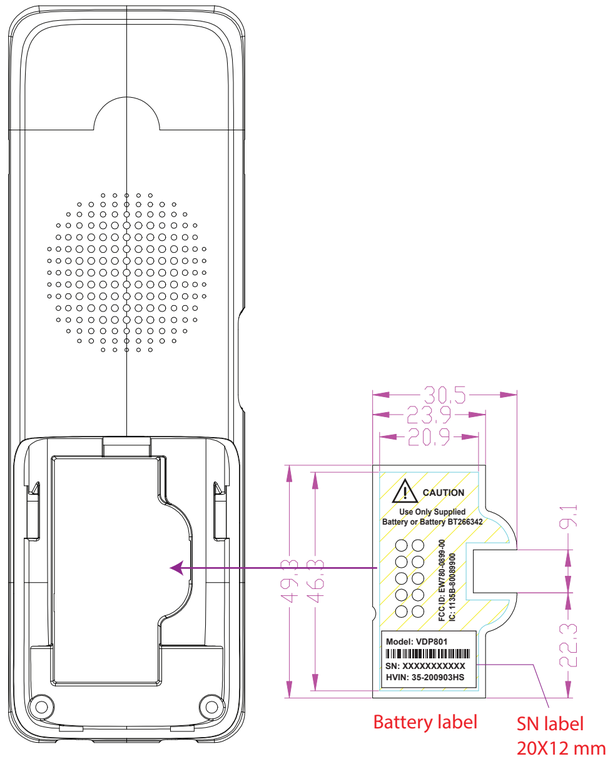
30.5
23.9
20.9
CAUTION
Use Only Supplied Battery or Battery BT266342
FC ID: EW780-0899-00
IC: 1135B-00089900
Model: VDP801
SN: XXXXXXXXXXX
HVIN: 35-200903HS
49.3
46.3
9.1
22.3
Battery label
SN label
20X12 mm

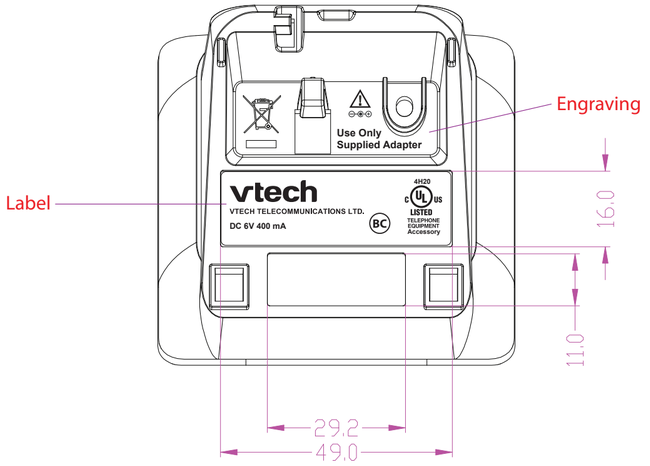
Engraving
Label
Use Only Supplied Adapter
vtech
VTECH TELECOMMUNICATIONS LTD.
DC 6V 400 mA
4H20
LISTED
TELEPHONE EQUIPMENT Accessory
16.0
11.0
29.2
49.0

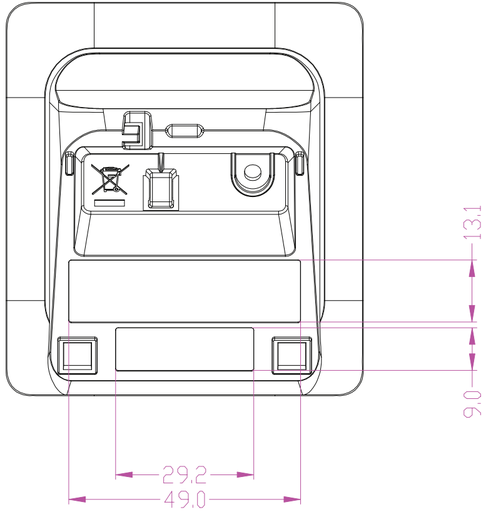
13.1
9.0
29.2
49.0

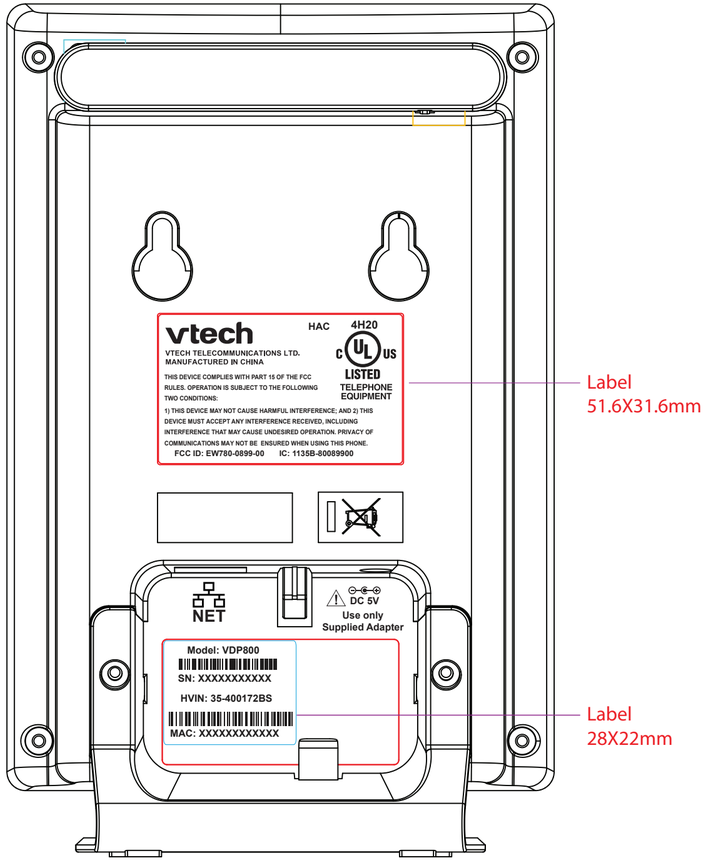
vtech
VTECH TELECOMMUNICATIONS LTD.
MANUFACTURED IN CHINA
THIS DEVICE COMPLIES WITH PART 15 OF THE FCC RULES. OPERATION IS SUBJECT TO THE FOLLOWING TWO CONDITIONS:
1) THIS DEVICE MAY NOT CAUSE HARMFUL INTERFERENCE; AND 2) THIS DEVICE MUST ACCEPT ANY INTERFERENCE RECEIVED, INCLUDING INTERFERENCE THAT MAY CAUSE UNDESIRED OPERATION. PRIVACY OF COMMUNICATIONS MAY NOT BE ENSURED WHEN USING THIS PHONE.
FCC ID: EW780-0899-00 IC: 1135B-80089900
HAC
4H20
LISTED
TELEPHONE EQUIPMENT
NET
DC 5V
Use only Supplied Adapter
Model: VDP800
SN: XXXXXXXXXXX
HVIN: 35-400172BS
MAC: XXXXXXXXXXXX
Label
51.6X31.6mm
Label
28X22mm