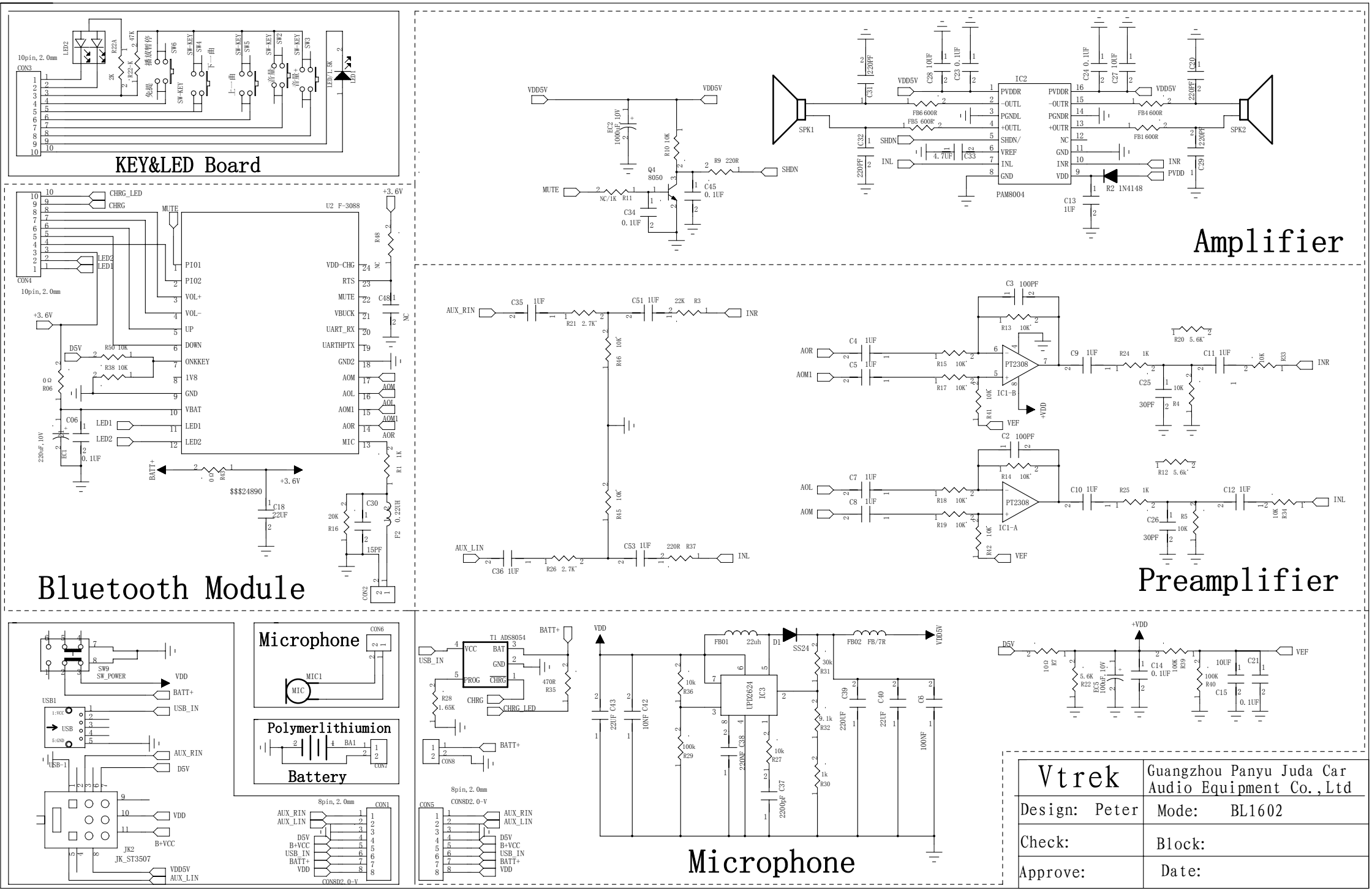

Vtrek	Guangzhou Panyu Juda Car Audio Equipment Co.,Ltd
Design: Peter	Mode: BL1602
Check:	Block:
Approve:	Date:

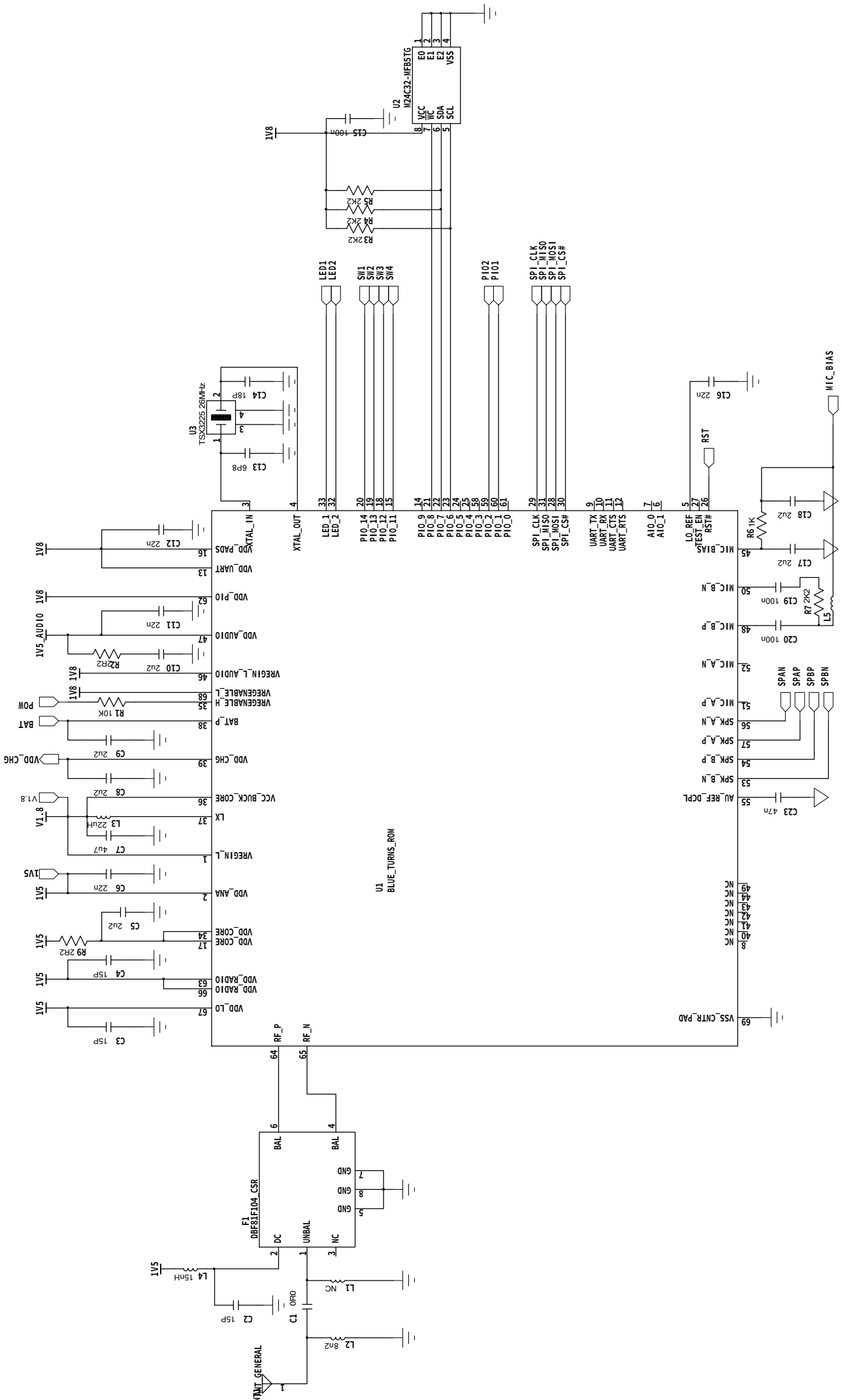

PDF 文件使用 "pdfFactory Pro" 试用版本创建 www.fineprint.com.cn