SCHEMATIC DIAGRAM

LOWRANCE

VHF DSC RADIO

LVR - 850

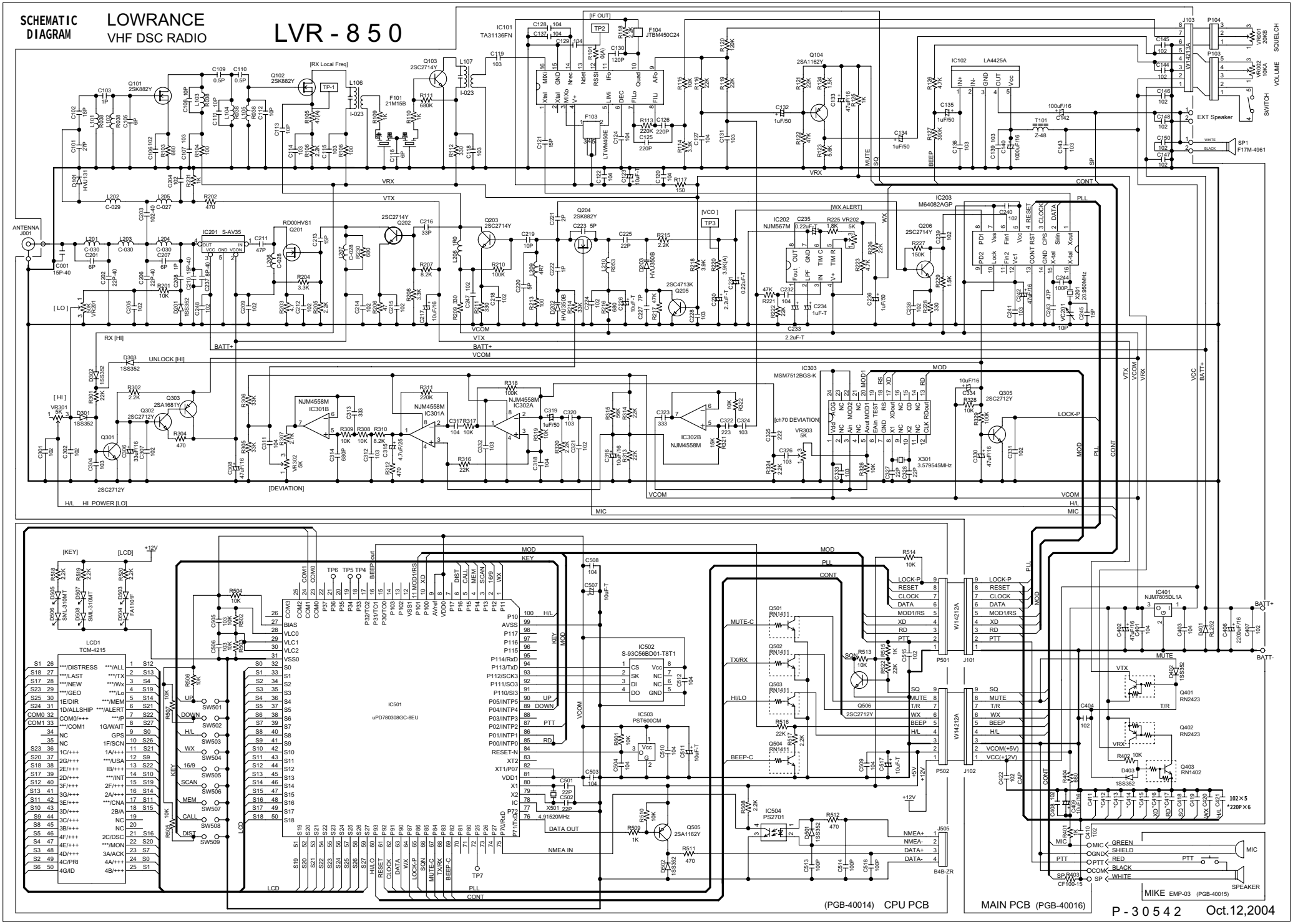

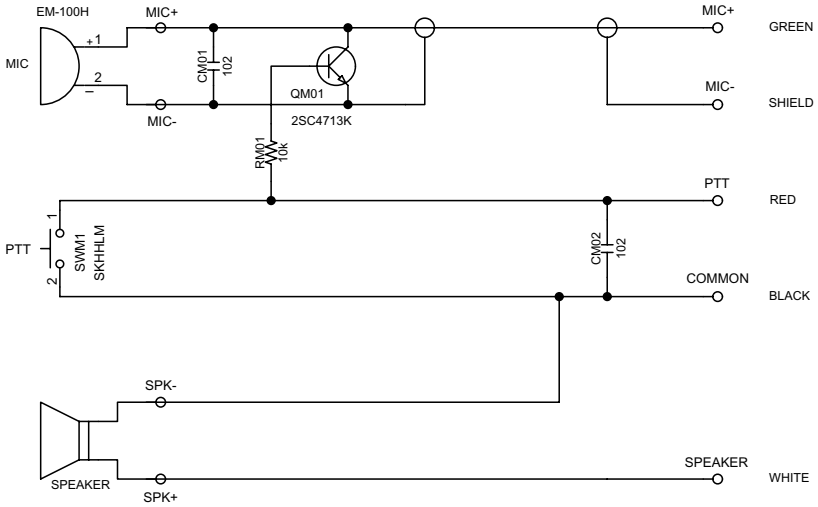

TITLE	DRAWING_No.
LOWRANCE MICROPHONE EMP-03	P-41368

SHEET	DATE	DESIGN
/		