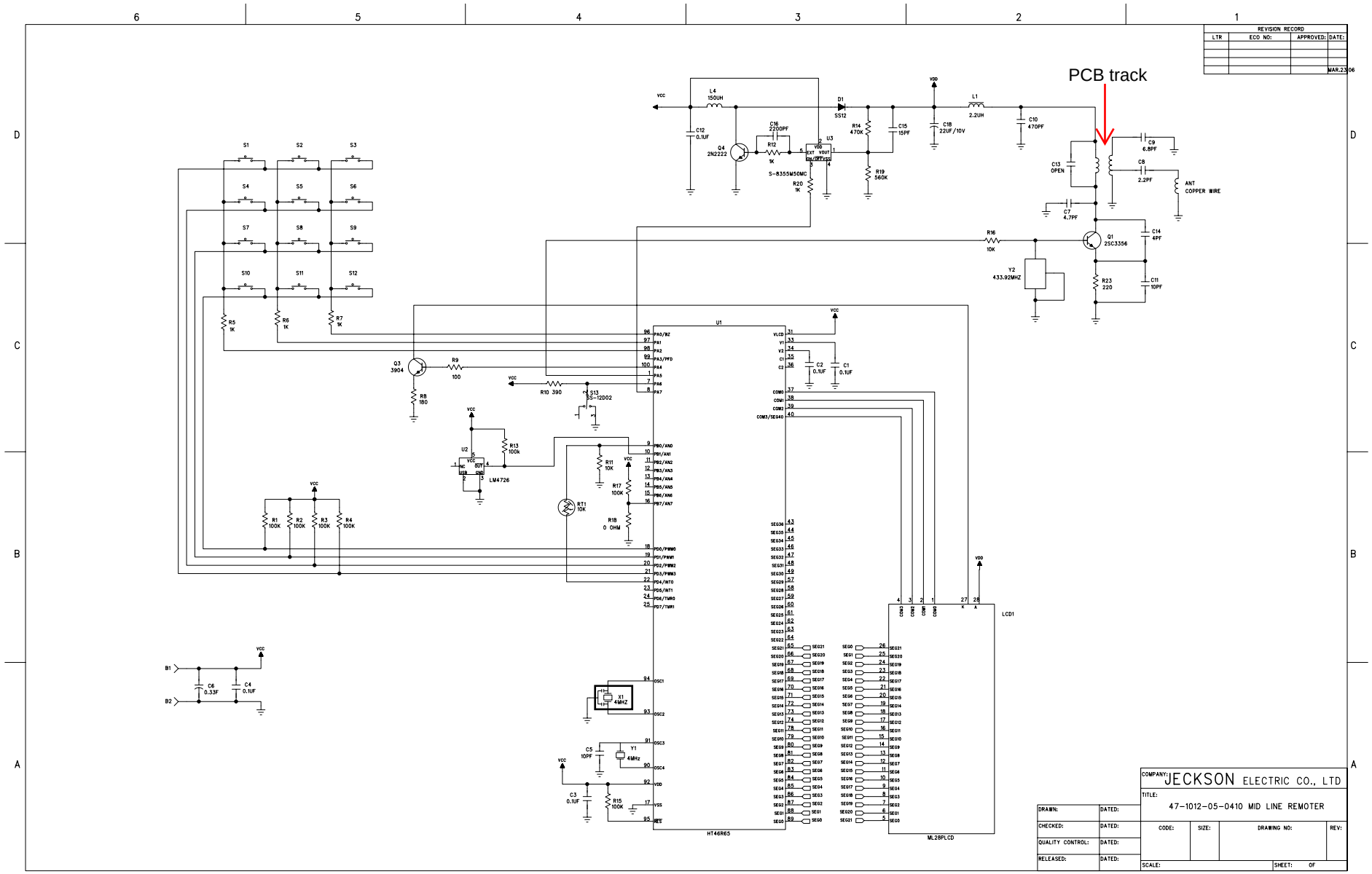
PCB track
REVISION RECORD
LTR
ECO NO:
APPROVED:
DATE:
MAR.23.06
L4 150UH
C12 0.1UF
Q4 2N2222
C16 2200PF
R12 1K
S-8355M50MC
U3
D1 SS12
R14 470K
R19 560K
R20 1K
C15 15PF
C18 22UF/10V
L1 2.2UH
C10 470PF
C9 6.8PF
C8 2.2PF
C13 OPEN
C7 4.7PF
ANT COPPER WIRE
R16 10K
Q1 2SC3356
C14 4PF
C11 10PF
Y2 433.92MHZ
R23 220
S1
S2
S3
S4
S5
S6
S7
S8
S9
S10
S11
S12
R5 1K
R6 1K
R7 1K
Q3 3904
R9 100
R8 180
R10 390
S13 SS-12D02
U2
LM4726
R13 100K
R11 10K
R17 100K
RT1 10K
R18 0 OHM
R1 100K
R2 100K
R3 100K
R4 100K
U1
HT46R65
LCD1
ML28PLCD
B1
B2
C6 0.33F
C4 0.1UF
X1 4MHZ
C5 10PF
Y1 4MHz
C3 0.1UF
R15 100K
C2 0.1UF
C1 0.1UF
COMPANY: JECKSON ELECTRIC CO., LTD
TITLE: 47-1012-05-0410 MID LINE REMOTER
DRAWN:
DATED:
CHECKED:
QUALITY CONTROL:
RELEASED:
CODE:
SIZE:
DRAWING NO:
REV:
SCALE:
SHEET: OF