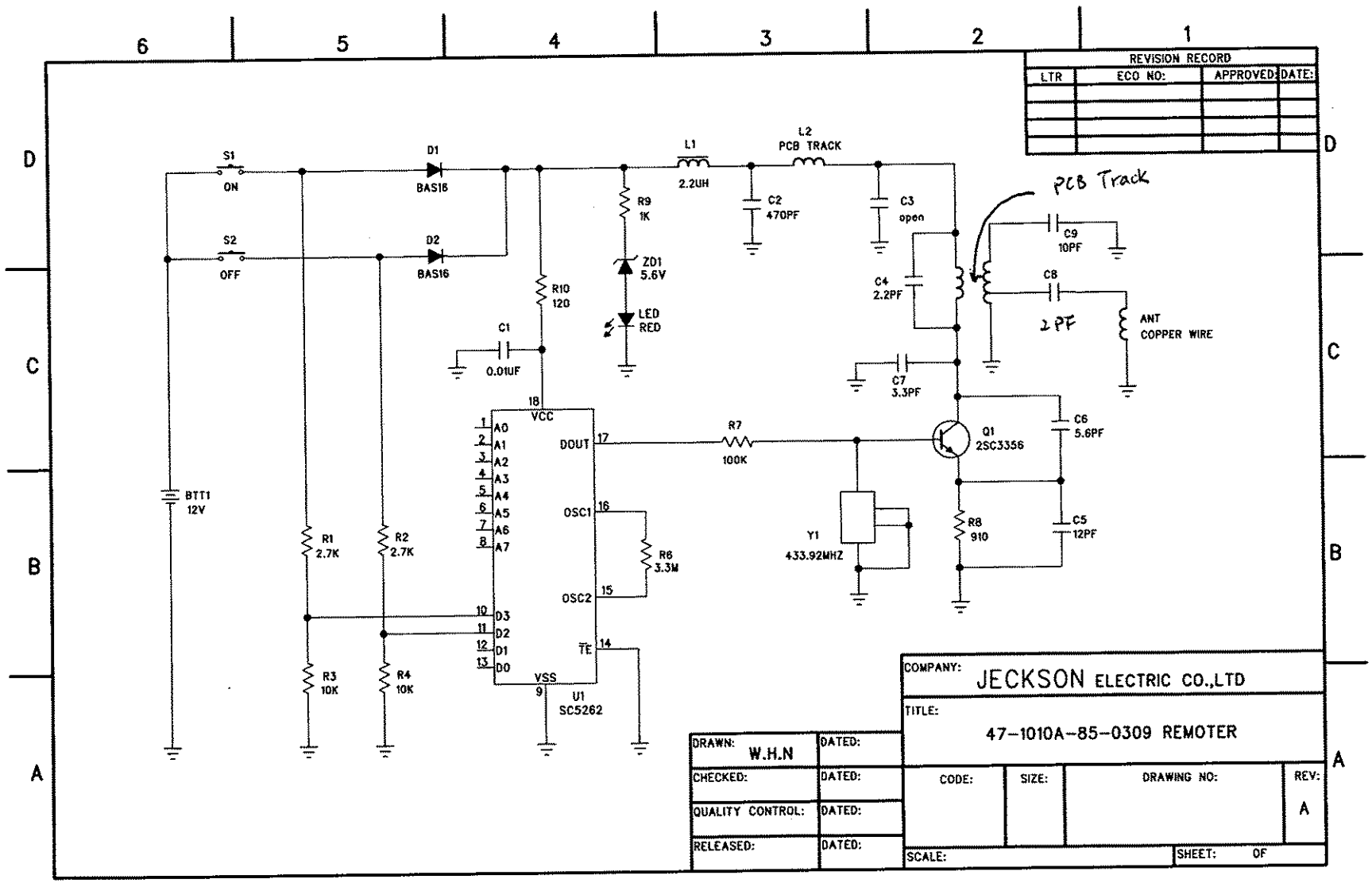
S1
ON
S2
OFF
D1
BAS16
D2
BAS16
BTT1
12V
R1
2.7K
R2
2.7K
R3
10K
R4
10K
R10
120
C1
0.01UF
R9
1K
ZD1
5.6V
LED
RED
L1
2.2UH
L2
PCB TRACK
C2
470PF
C3
open
C4
2.2PF
C7
3.3PF
PCB Track
C9
10PF
C8
2PF
ANT
COPPER WIRE
C6
5.6PF
C5
12PF
Q1
2SC3356
R8
910
R7
100K
Y1
433.92MHZ
R6
3.3M
VCC
DOUT
OSC1
OSC2
TE
VSS
A0
A1
A2
A3
A4
A5
A6
A7
D3
D2
D1
D0
U1
SC5262
REVISION RECORD
LTR
ECO NO:
APPROVED:
DATE:
COMPANY:
JECKSON ELECTRIC CO.,LTD
TITLE:
47-1010A-85-0309 REMOTER
DRAWN:
W.H.N
DATED:
CHECKED:
QUALITY CONTROL:
RELEASED:
CODE:
SIZE:
DRAWING NO:
REV:
A
SCALE:
SHEET:
OF