REVISION HISTORY				
ZONE	REV	DESCRIPTION	DATE	APPROVED
-	A01	ECO E35358 - INITIAL RELEASE	Mar 14, 2019	

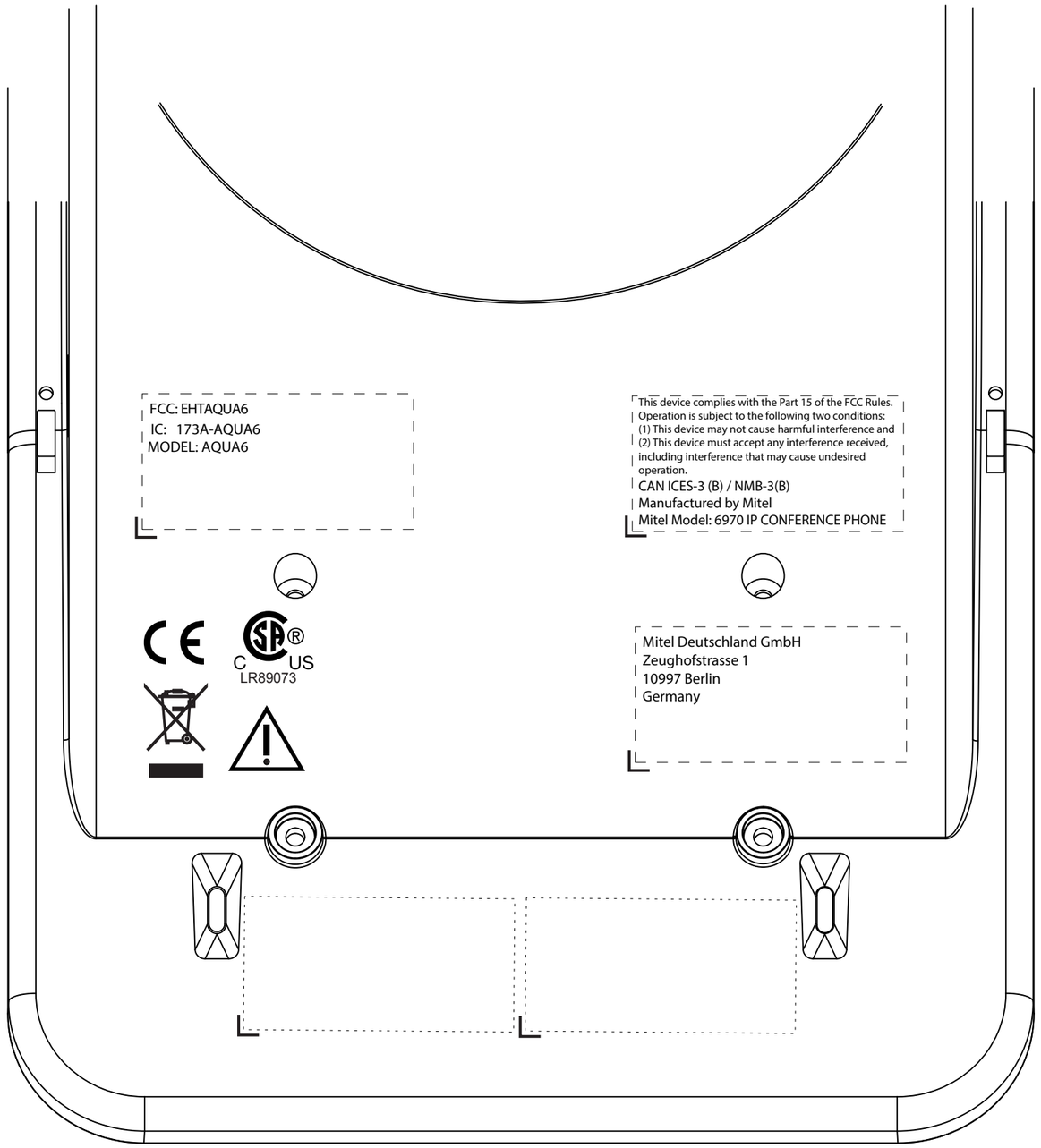

Scale 1:1 Artwork Placement
(shown in black for clarity)

NOTES: UNLESS OTHERWISE SPECIFIED

1. THIS FILE CONSISTS OF SEPARATE LAYERS.

2. ARTWORK COLOR: BASE PLASTIC COLOR (ARTWORK IS EMBOSSED AND ENGRAVED, NOT PRINTED).

3. REFER TO DRAWING 57011985X FOR PIECE-PART SPECIFICATIONS AND EMBOSSING HEIGHTS AND ENGRAVING DEPTHS.

4. LOGOS & LOCATING CORNERS NOT SURROUNDED BY DASHED LINES (BOUNDARIES) MUST BE EMBOSSED.

5. DASHED LINES ONLY INDICATE BOUNDARIES AND ARE NOT INTENDED TO BE ENGRAVED. THESE AREAS ARE DEFINED AS FOLLOWS:

Denotes a SPI A1 polished region made with an insert. Text inside this region to be engraved (below surface).

Denotes a SPI A1 polished region. Area to apply label.

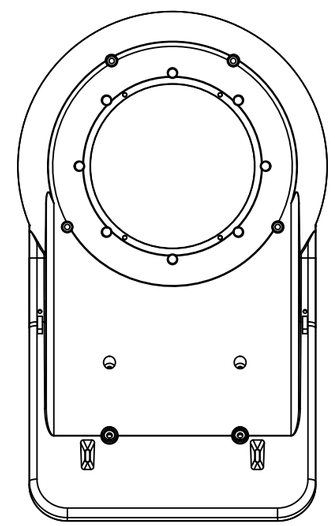

Scale 1:4

-	-	-
5801565201RA	A/W 6970 CONF PHONE BOTTOM COVER	01
PART OR IDENTIFYING NO	NOMENCLATURE OR DESCRIPTION	REV

VARIANT TABLE

APPROVALS - REFER TO ECO DATABASE

THIS ADOBE ILLUSTRATOR OUTLINE FILE (*.ai FORMAT ONLY) SHALL BE USED AS THE MASTER PRODUCTION ARTWORK.

ALL SHEETS ARE THE SAME REVISION STATUS

THESE DRAWINGS AND SPECIFICATIONS ARE THE PROPERTY OF MITEL NETWORKS AND SHALL NOT BE REPRODUCED, COPIED, OR USED AS THE BASIS FOR THE MANUFACTURE, OR SALE OF APPARATUS WITHOUT THE WRITTEN PERMISSION OF MITEL NETWORKS.

Mitel

www.mitel.com

TITLE

VAR DWG A/W 6970 CONF PHONE BOTTOM COVER

SIZE		DWG NO	REV
B		58015652X	A01
SCALE 1:1		SHEET 1 of 1	