This document is the property of Remtron Inc. and contains PROPRIETARY information. All recipients hereof agree to the foregoing, and agree not to make any duplication thereof or to disclose the information herein to others or to use it for any purpose other then that for which it is loaned without the express written consent of Remtron, Inc. and to return the document upon demand

REVISIONS			
LTR	DESCRIPTION	DATE	DRAWN
1	INITIAL DESIGN	04/20/97	JO
A	INITIAL RELEASE	08/13/97	JO
B	ADD LOW BAT SHUTOFF CLEAN UP RF	09/02/97	JO
C	ECN 900161 REV C	9-1-99	JO
D			

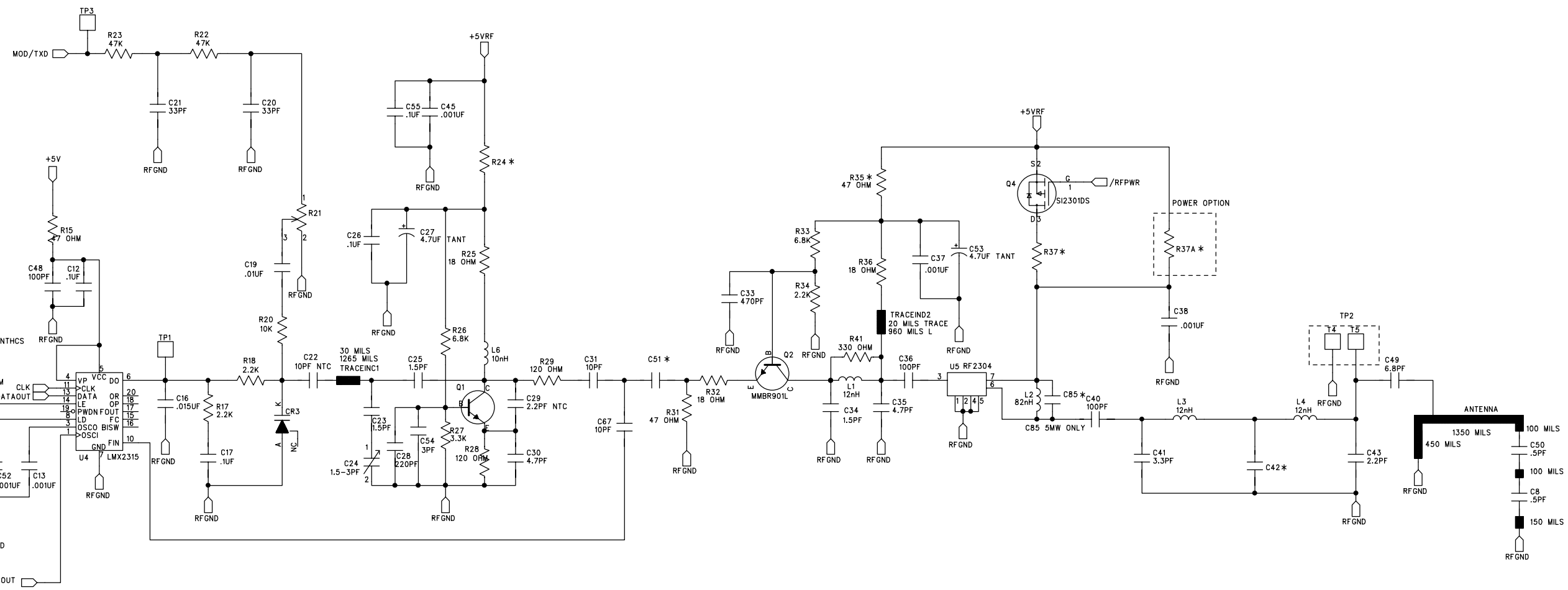

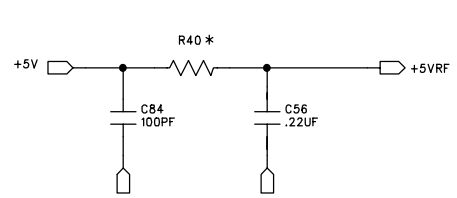

* COMPONENT VALUES

REF	-01 1MW	-03 5MW
R24	180 OHM	47 OHM
R35	47 OHM	18 OHM
R37A	120 OHM	18 OHM
R37	120 OHM	18 OHM
R40	22 OHM	10 OHM
C42	3.3 pF	3.9 pF
C51	4.7 pF	10 pF
C85		1 pF

DRAWN: JO	DATE: 8-30-99	REMTRON 1916 W. MISSION RD. ESCONDIDO, CA. 92029-1114	
ENG:	DATE:	TITLE: SCHEMATIC, RCT823 TX RF	
MFG:	DATE:	SIZE C / DOCUMENT NUMBER: 800161	REV C
RELEASED:	DATE:	FILE: 800161C.SCH	SHEET 2 OF 2