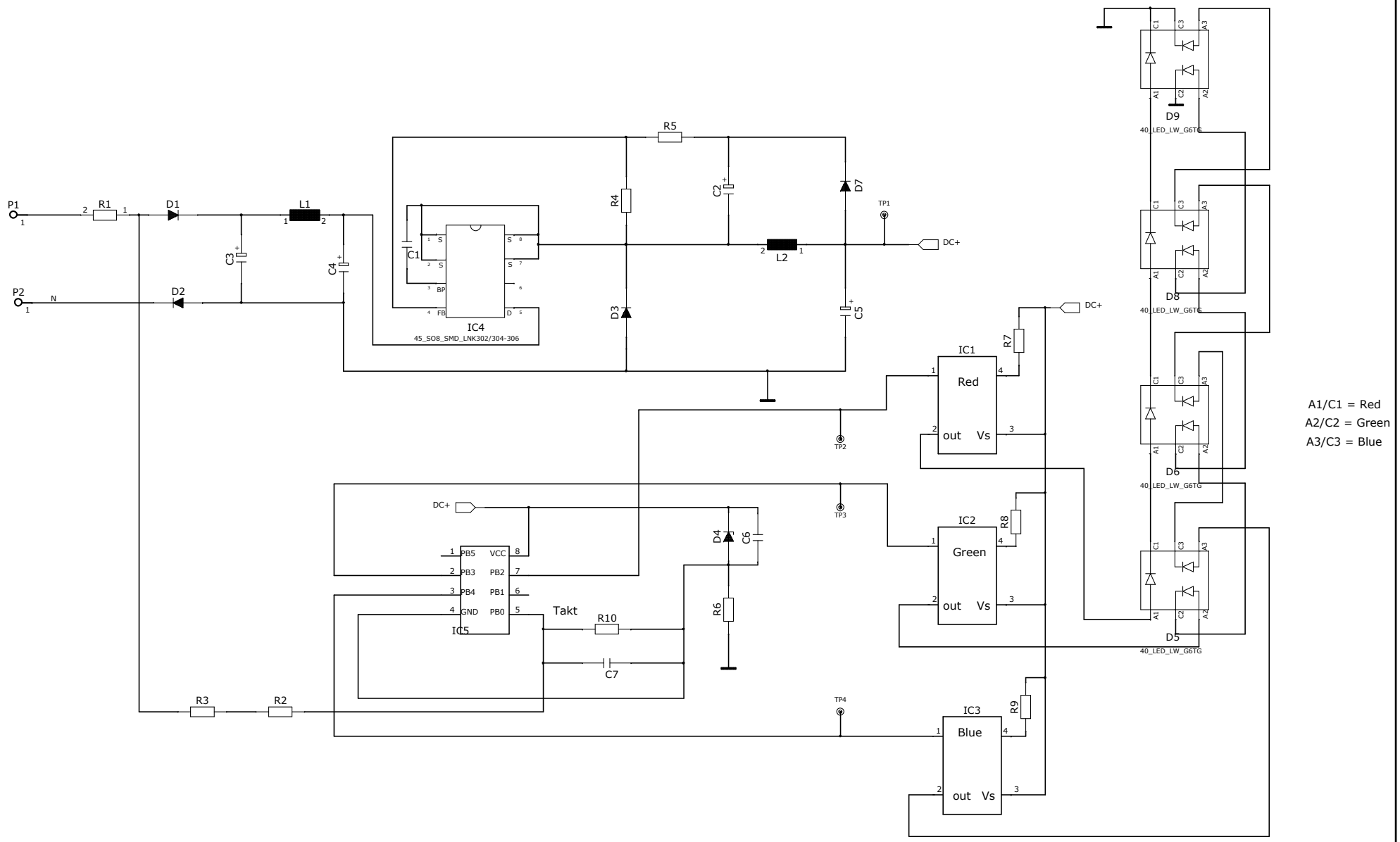

index	revision	subject of change	date	editor	checked	Signature
AA	<revision>	first edition	23.11.2007	Elaine	Yuley	Page 1 of 1

OSRAM
BL D/CE-M

Schaltplan / schematic
Parathom G95 Color Change

ZDD: 2407367

Proprietary data. company confidential. All rights reserved.