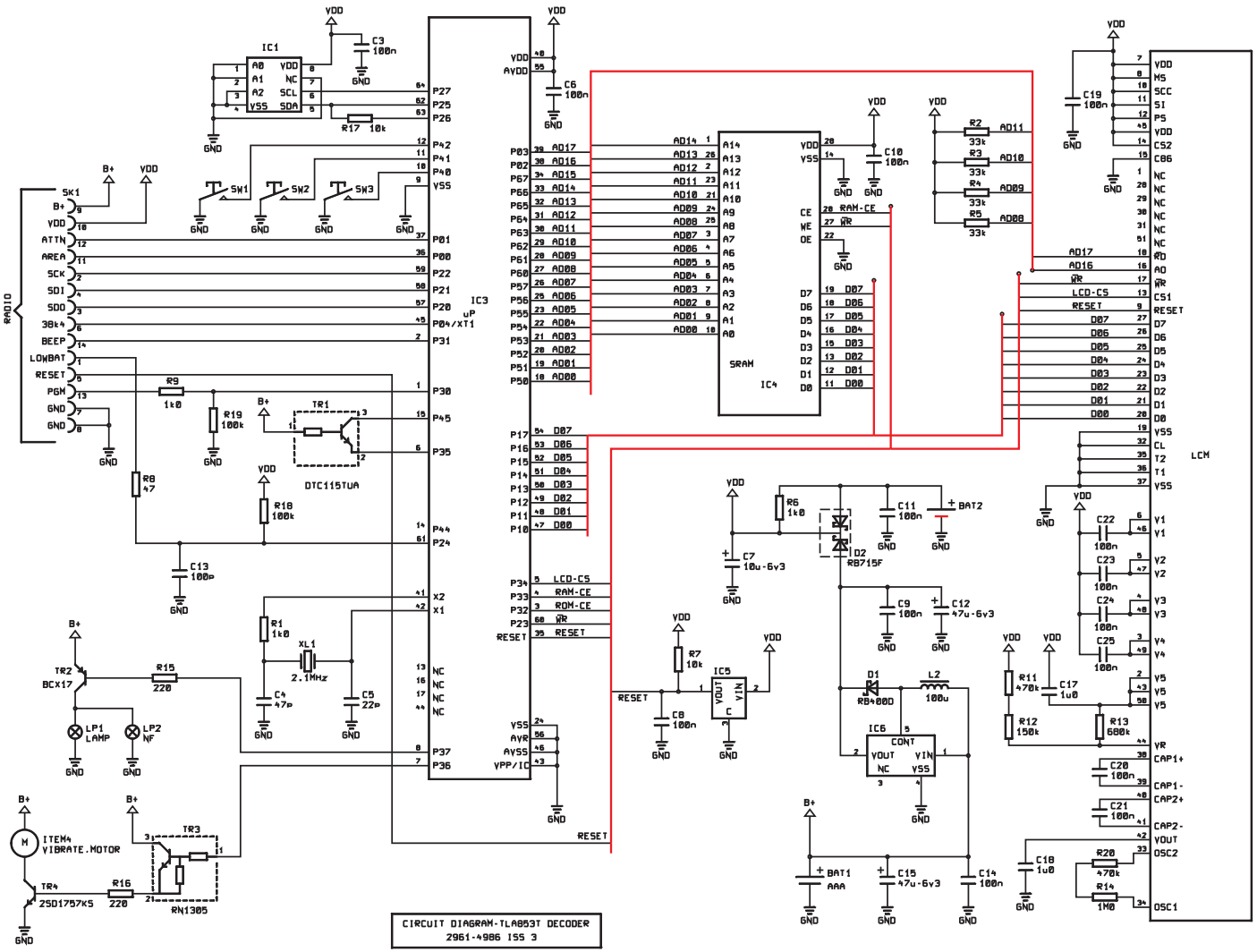

DRG No.	2961-4986	SHEET 1 OF 1	B

ISSUE	AMENDMENT	DATE
A	INTRODUCED	1.4.97
B	DCN 2205	8.5.97
C	DCN 2210 DCN 2214 DCN 2216	28.5.97
D	DCN 2231	23.6.97
1	PRODUCTION ISSUE	24.6.97
2	PCN 4889	30.6.97
3	PCN 4908	5.8.97
4	PCN 4978 PCN 4988	16.6.98
5	PCN 4940	24.6.98
	MOD ON CAD ONLY	

TOLERANCES UNLESS STATED OTHERWISE
± 0.4 TO 1 DEC. PLACE
± 0.2 TO 2 DEC. PLACES ANGLES±1/2°
± 0.1 TO 3 DEC. PLACES
HOLES ± 0.05 UP TO 5 ± 1% ABOVE
CONCENTRICITY TO WITHIN 0.1 DIA.
ALL THREADS TO BS3643 PT2 1981 CLASS 6H - 6g

MATERIAL

FINISH

DIMENSIONS IN mm

SCALE

THIRD ANGLE PROJECTION

	NAME	DATE
DRAWN	J.BURNLEY	1.4.97
CHECKED	L.HART	25.6.97
APPROVED	G.LEWIS	26.6.97
APPROVED	D.WHITFIELD	26.6.97

DO NOT SCALE DRAWING

Multitone Electronics plc 1997
© RESERVE THE COPYRIGHT OF THIS DRAWING WHICH IS NOT TO BE COPIED
REPRODUCED OR DISCLOSED TO A THIRD PARTY WITHOUT WRITTEN CONSENT

TITLE CIRCUIT DIAGRAM-TLA853T DECODER

DRG No. 2961-4986 SHEET 1 OF 1 B