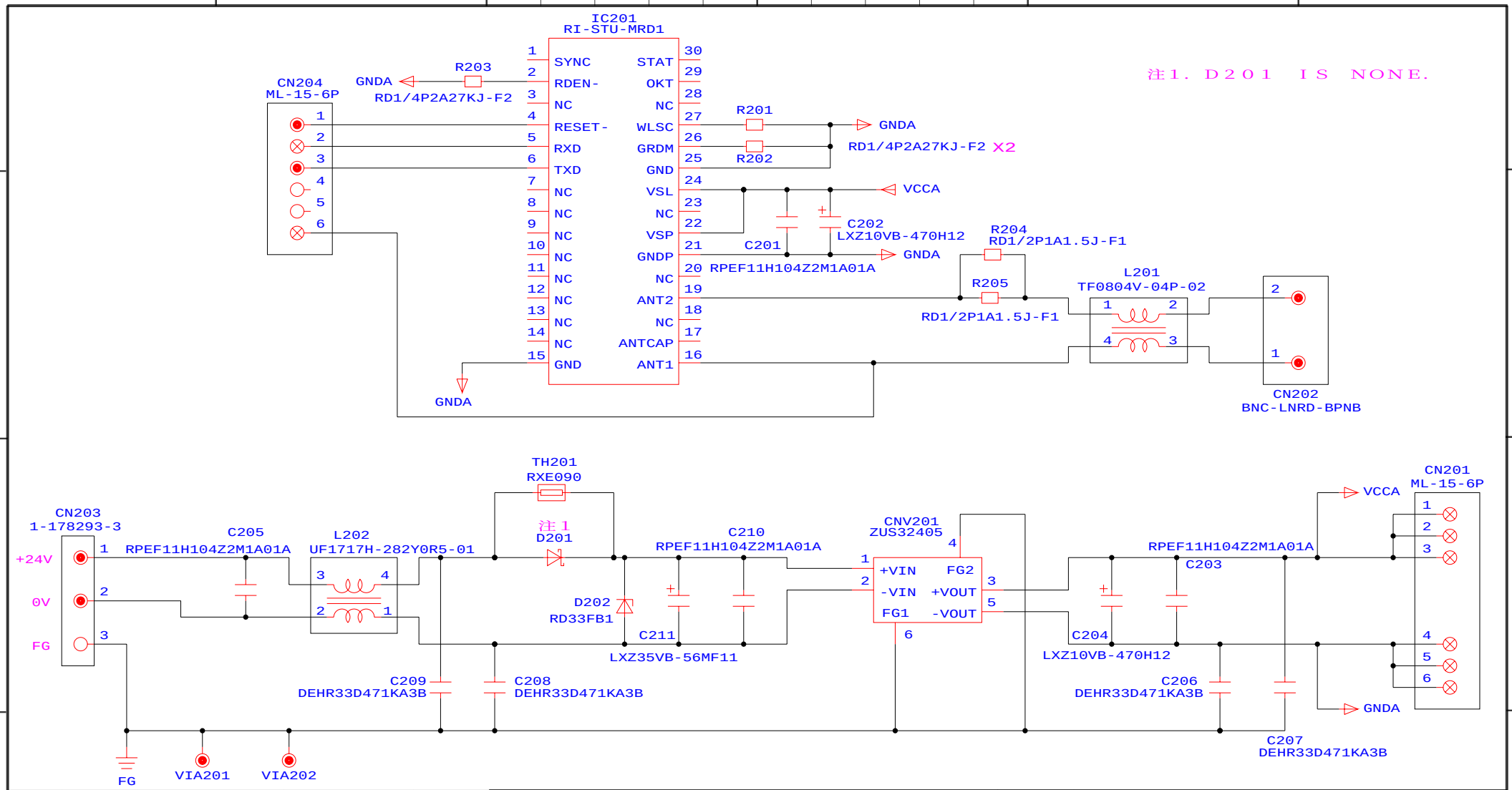

					MATERIAL			SCALE	CCT DIGM(2)
					FINISH				カイロズ(2)
					TOLERANCES UNLESS SPECIFIED	DESIGNED 02/06/17 FAIS 有吉	CHECKED FAIS 奥野	APPROVED FAIS.M 三宅	3RD ANGLE	DRWG NO. XXXXXXX-X A
SYM	DATE	E/C CONTENTS	E/C NO.	SIGN					SHEET 1/1	DESIGNED FOR V640-HAM11

© OMRON Corporation
ALL Rights Reserved.

OMRON