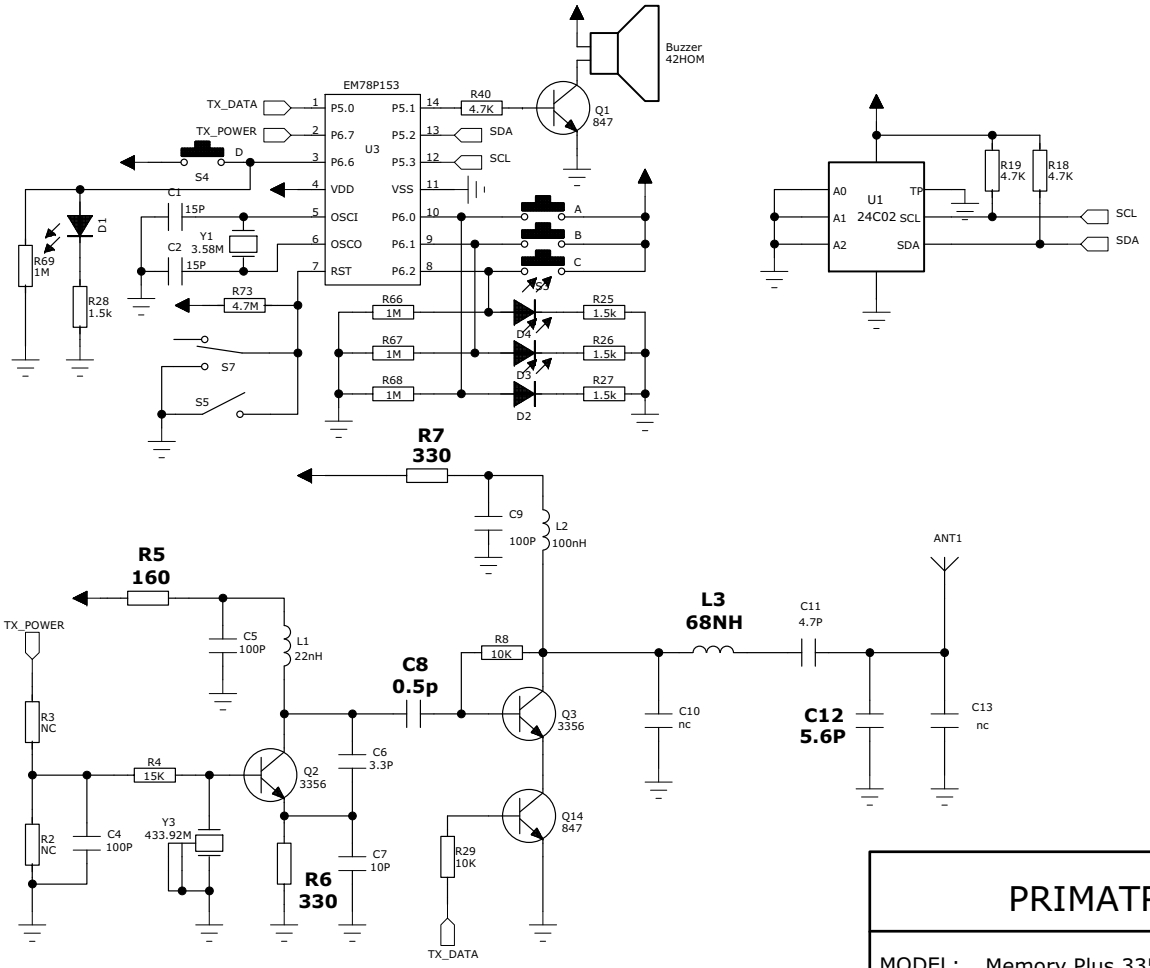

PRIMATRONIX LTD			
MODEL: Memory Plus 335	FILENAME: 335U1T1.sch		
PREPARED: DATE:	APPROVED: DATE:		
VERSION NUMBER: 1			
TITLE: Subject finder transmiter			
DOCUMENT NO: USA/DOR/MEMORY PLUS 335/T1	SIZE A4	SHEET 1 OF 2	REV. 1