EXHIBIT E

Block Diagram

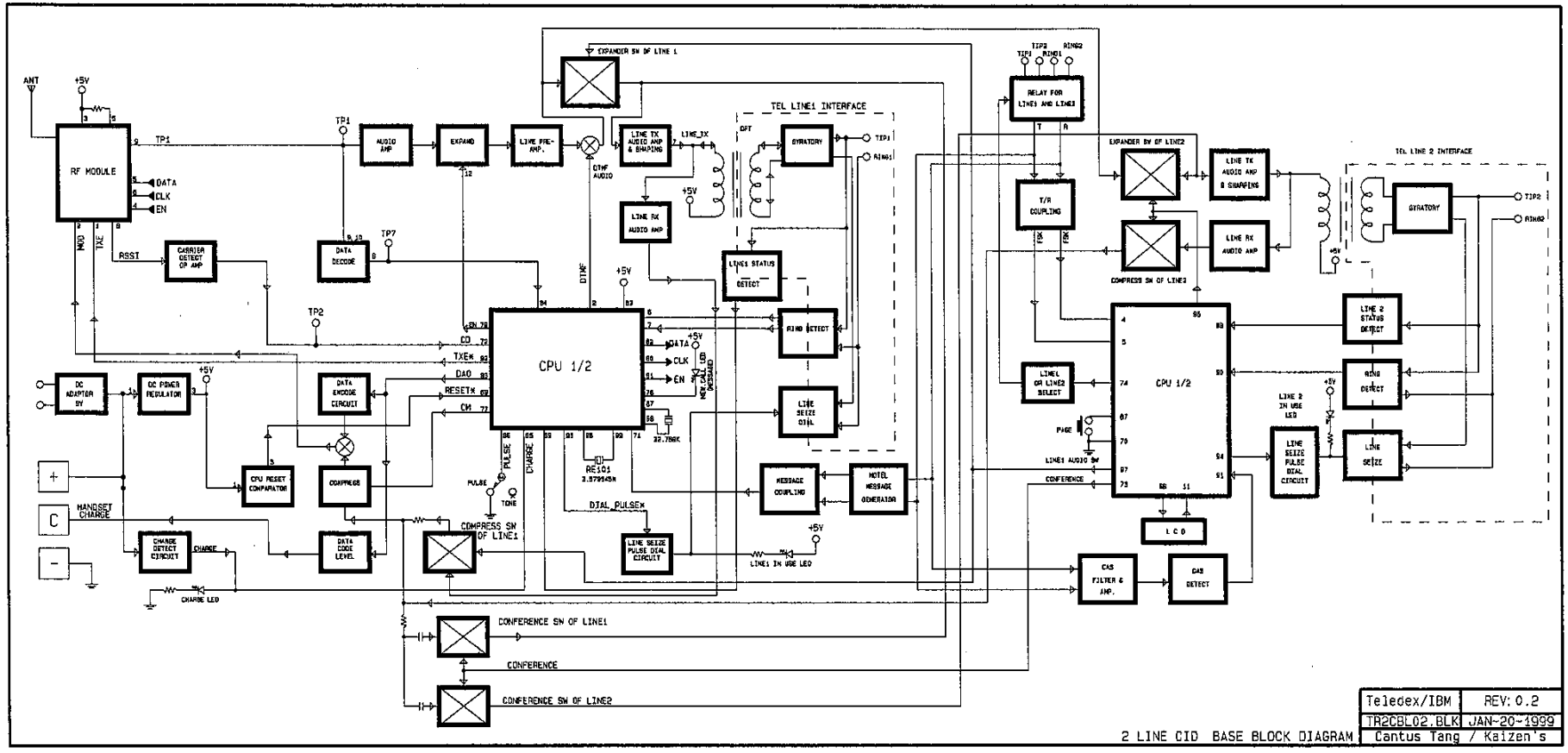

2 LINE CID BASE BLOCK DIAGRAM

Teledex/IBM	REV: 0.2
TR2CBL02.BLK	JAN-20-1999
Cantus Tang / Kaizen's	