EXHIBIT D

Circuit Diagram

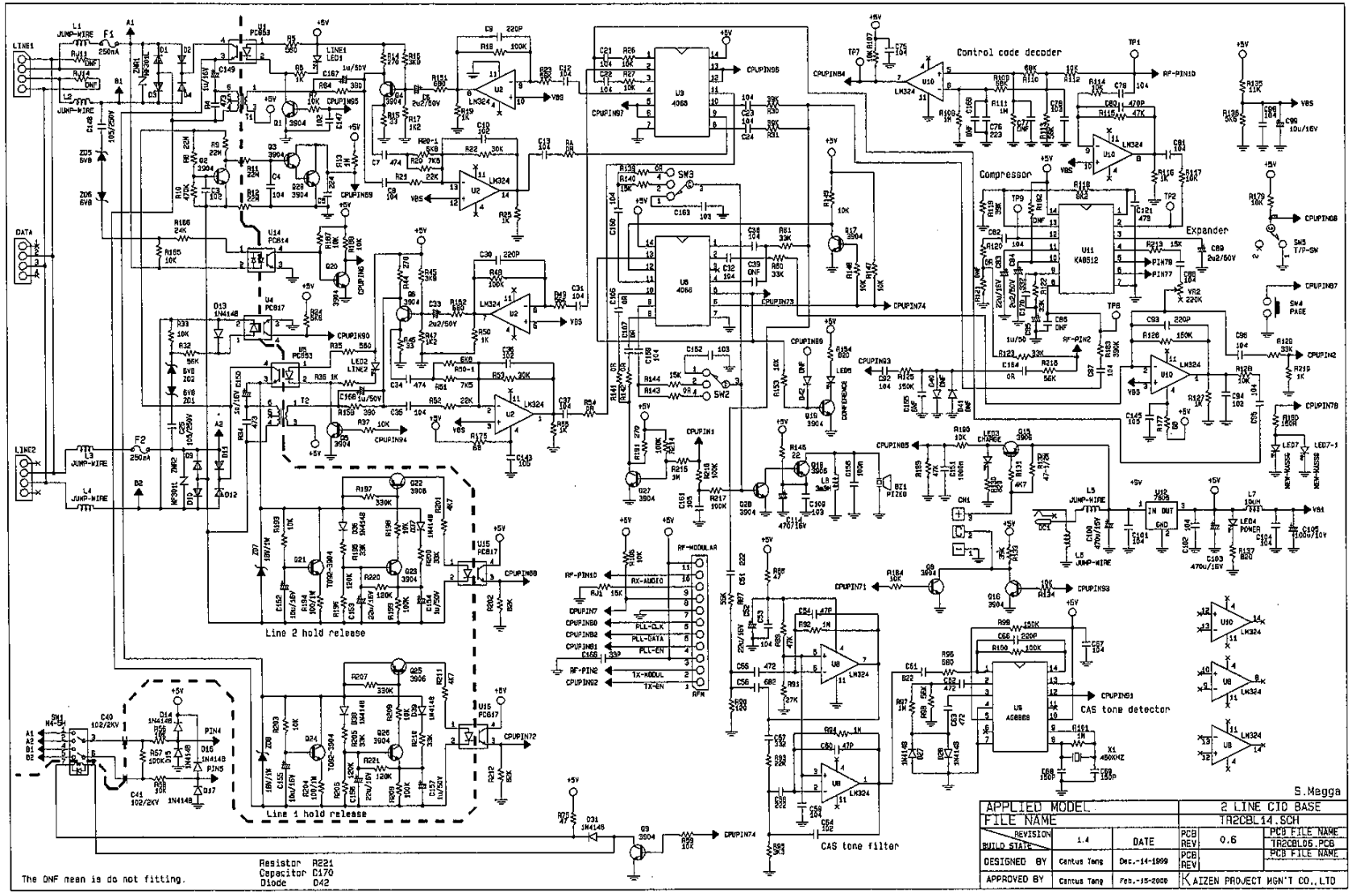
Control code decoder
Compressor
Expander
Line 2 hold release
Line 1 hold release
CAS tone detector
CAS tone filter
S.Maggs
APPLIED MODEL: 2 LINE CID BASE
FILE NAME: TR2CBL14.SCH
REVISION 1.4
DATE
PCB REV 0.6
PCB FILE NAME TR2CBL06.PCB
BUILD STATE
DESIGNED BY Cantus Tang Dec.-14-1999
APPROVED BY Cantus Tang Feb.-15-2000
AIZEN PROJECT MGN'T CO.,LTD
The DNF mean is do not fitting.
Resistor R221
Capacitor C170
Diode D42

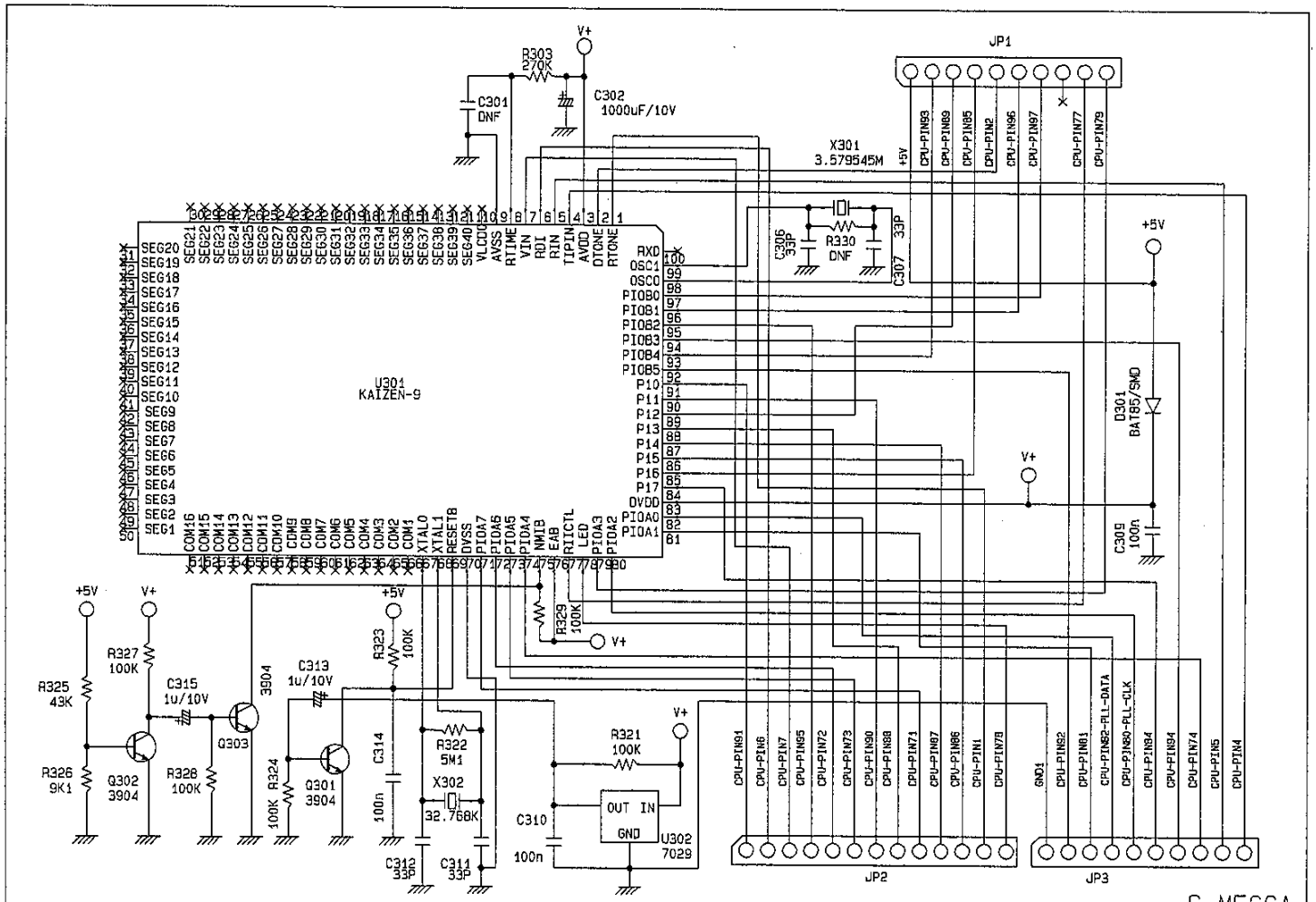

S.MEGGA

NOTE		
1	TRANSISTOR	Q303
2	DIODE	D301
3	ZENER DIODE	
4	RESISTOR	R303~R330
5	CAPACITOR	C301~C315
6	IC	U301~U302
7	IFT	
8	INDUCTORS	

APPLIED MODEL			2 LINE CID BASE CPU		
FILE NAME			TR2CPU08.SCH		
REVISION / BUILD STATE	0.8	DATE	PCB REV	0.4	PCB FILE NAME TR2CPU04
DESIGNED BY	Frank	Nov. 28 '99	PCB REV		PCB FILE NAME
APPROVED BY	CANTUS	Feb. 15 '00	KAIZEN PROJECT MGN'T CO.,LTD		

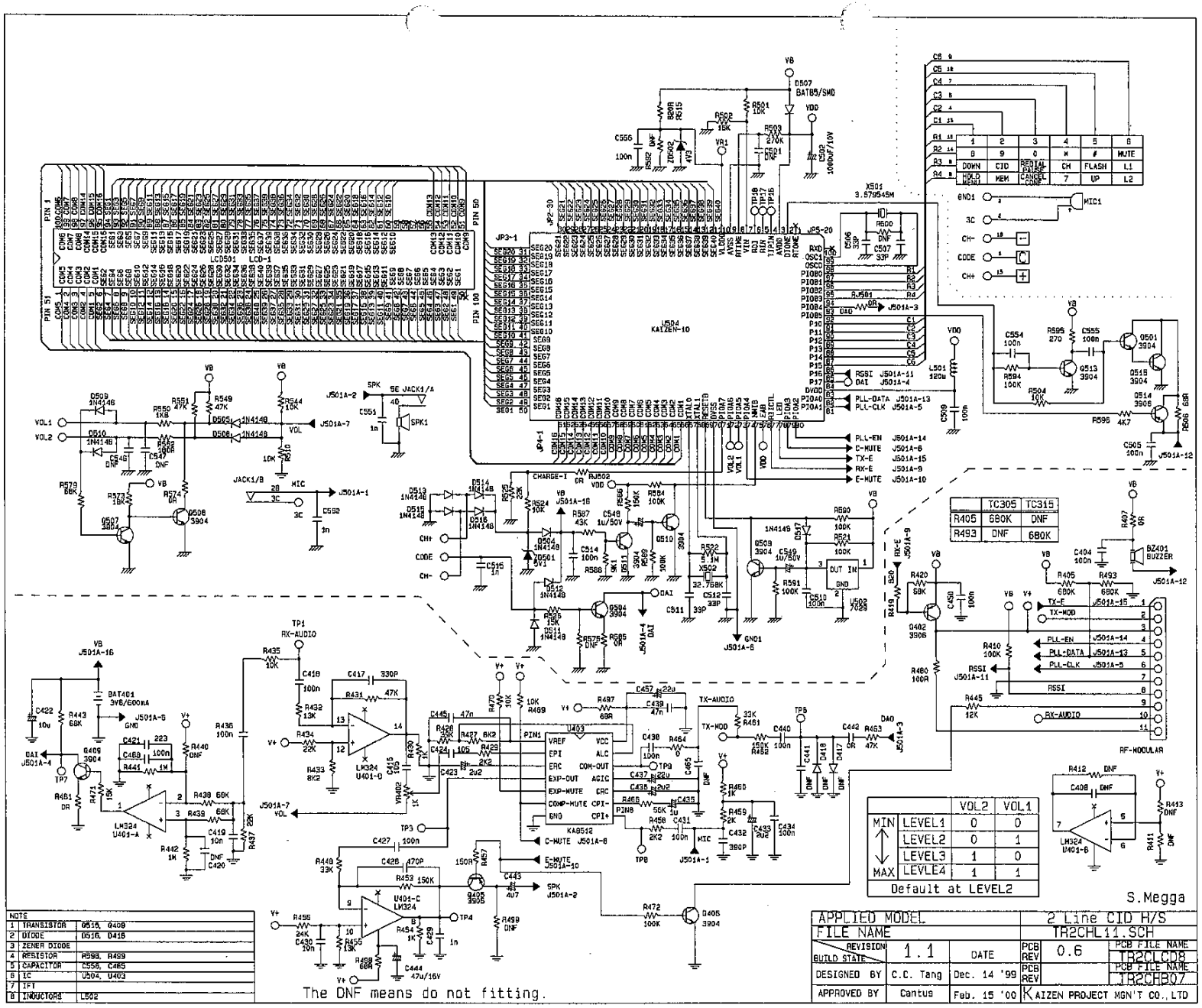

NOTE		
1	TRANSISTOR	Q516, Q409
2	DIODE	D516, D416
3	ZENER DIODE	
4	RESISTOR	R598, R499
5	CAPACITOR	C556, C465
6	IC	U504, U403
7	IFT	
8	INDUCTORS	L502