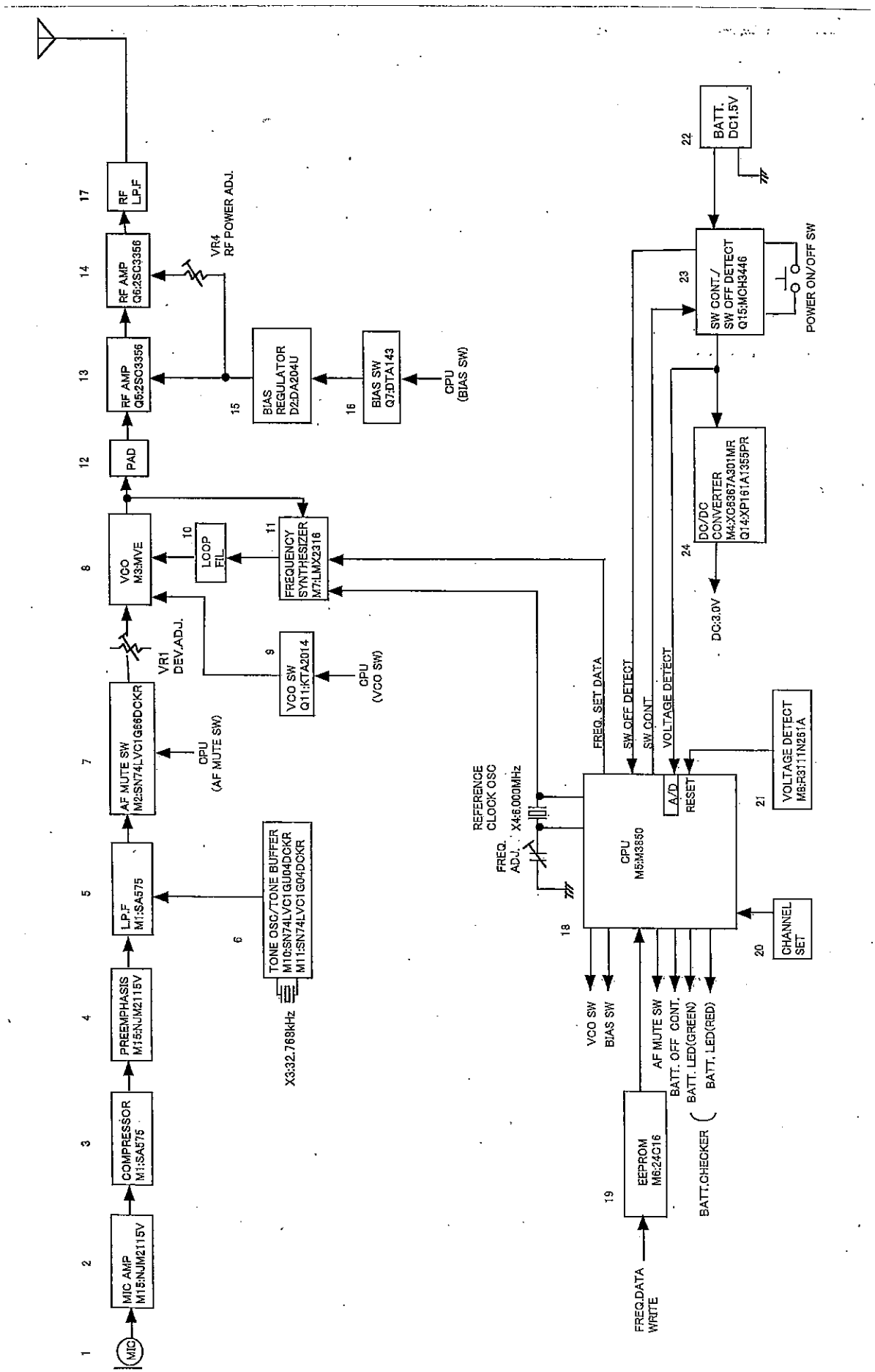1. BLOCK DIAGRAM