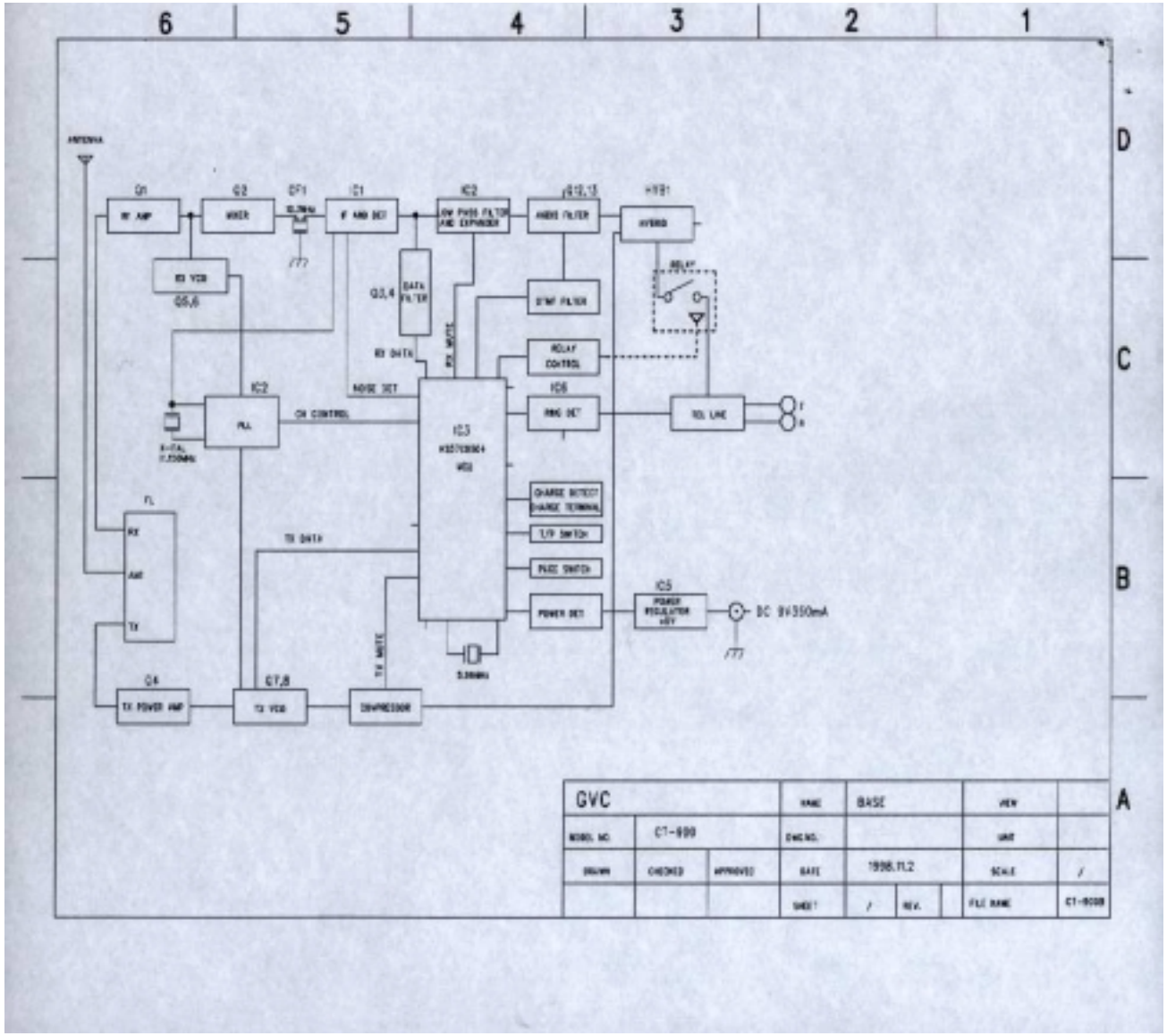
6
5
4
3
2
1
D
C
B
A
ANTENNA
Q1
RF AMP
Q2
MIXER
CF1
IC1
IF AMP DET
IC2
LOW PASS FILTER AND EXPANDER
AUDIO FILTER
HYBRID
RELAY
Q5,6
RX VCO
Q3,4
DATA FILTER
RX DATA
RX MUTE
DTMF FILTER
RELAY CONTROL
IC2
PLL
NOISE DET
CH CONTROL
IC3
IC6
RING DET
TEL LINE
CHARGE DETECT
CHARGE TERMINAL
T/P SWITCH
PULSE SWITCH
POWER DET
IC5
POWER REGULATOR
DC 9V350mA
FL
RX
ANT
TX
TX DATA
TX MUTE
Q6
TX POWER AMP
CT7,8
TX VCO
COMPRESSOR
GVC
NAME
BASE
MODEL NO.
CT-900
DWG NO.
DRAWN
CHECKED
APPROVED
DATE
1996.11.2
SCALE
SHEET
REV.
FILE NAME
CT-900B

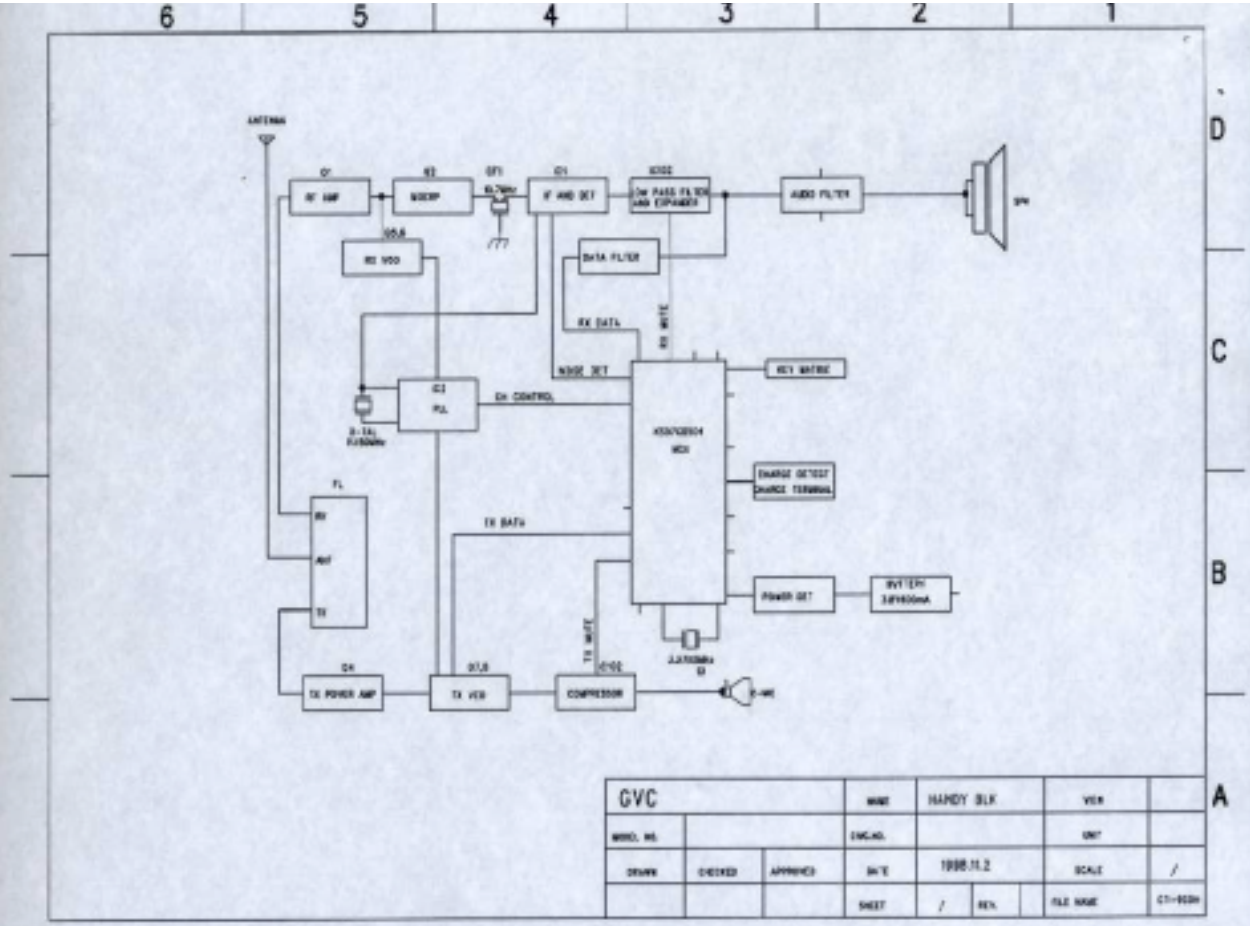
6
5
4
3
2
1
D
C
B
A
ANTENNA
RF AMP
MIXER
IF AMP DET
AUDIO FILTER
SPK
DATA FILTER
RX DATA
RX MUTE
NOISE DET
KEY MATRIX
CH CONTROL
PLL
CHARGE DETECT
CHARGE TERMINAL
TX DATA
POWER DET
TX MUTE
TX POWER AMP
TX VCO
COMPRESSOR
GVC
HANDY BLK
1998.11.2
/