Exhibit F: Schematics

FCC ID: CW21669-3

	B 150-174	D1 218-230	D2 240-260	
C6	33	15	18	
C7	56	24	33	
C8	56	24	27	
C66	22	10	10	
C10	47	39	39	
C11	15	20	12	
C13	18	18	12	
C14	10	27	15	
L1	56	39	33	
L4,5,7,8	Green	RED	RED	
C19	7	15	18	
L6	-3B	-2B(Unsh.)	-2B(Unsh.)	
R3	1.5k	3.3K	1.5k	
R4	6.8K	4.7k	6.8K	
R5	1K	2.2K	1K	
C16	10	8	6	
C30,21	1.0	.75	.75	
C18	10	12	5	
C20	220	33	18	
C19	7	15	18	
L12	56	27	22	
C49	10	NP	NP	
L14	33	22	22	
C53	10	18	22	
C59	8	NP	8	
L16	8	Jumper	Jumper	
L18	10T	3T	3T	
L19	10T	8T	6T	
C56	22	18	22	
C67	40	30	30	
C65	40	20	10	

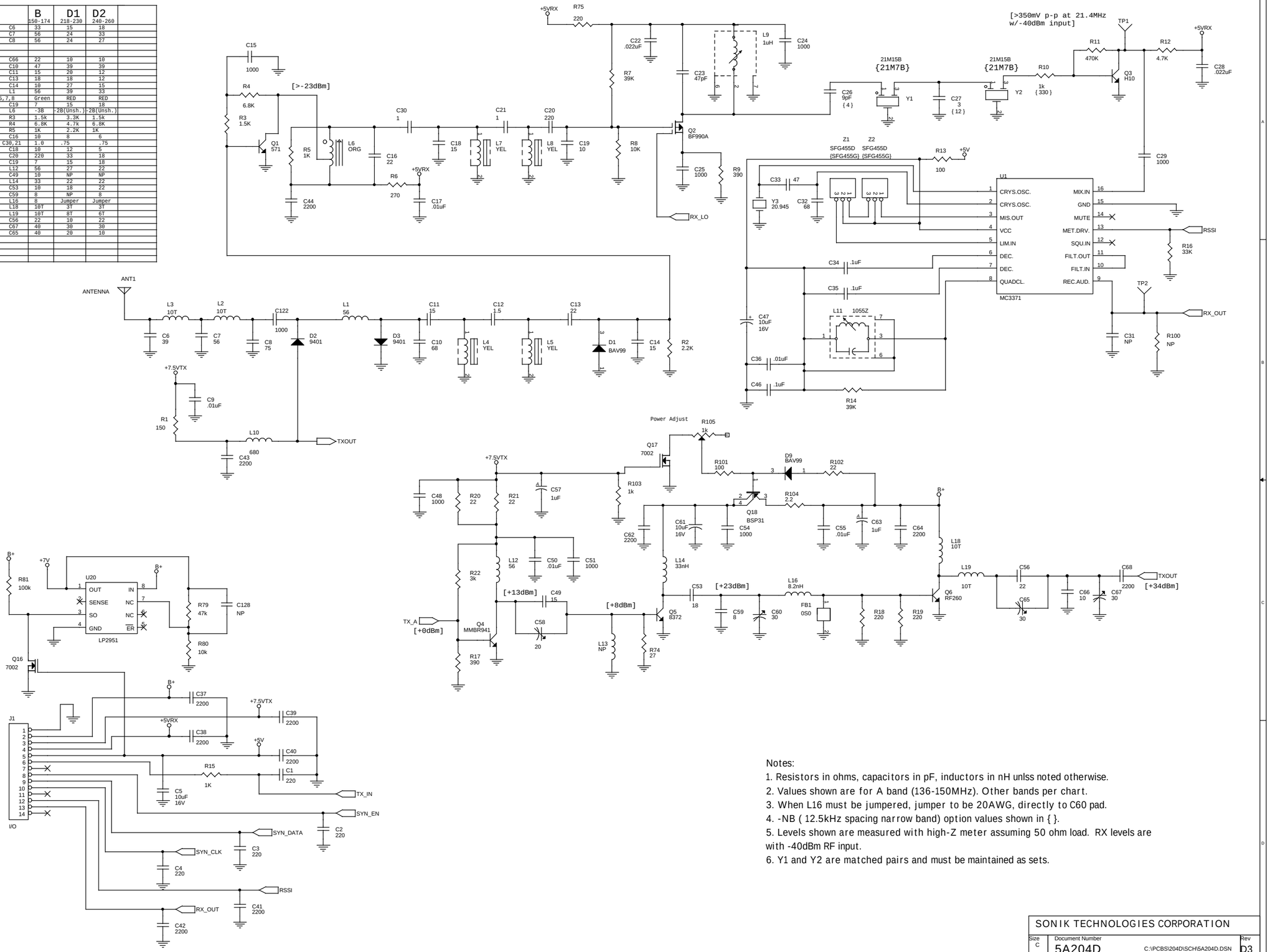

Notes:
1. Resistors in ohms, capacitors in pF, inductors in nH unlss noted otherwise.
2. Values shown are for A band (136-150MHz). Other bands per chart.
3. When L16 must be jumpered, jumper to be 20AWG, directly to C60 pad.
4. -NB (12.5kHz spacing narrow band) option values shown in { }.
5. Levels shown are measured with high-Z meter assuming 50 ohm load. RX levels are with -40dBm RF input.
6. Y1 and Y2 are matched pairs and must be maintained as sets.

SONIK TECHNOLOGIES CORPORATION

Size	Document Number	Rev
C	5A204D C:\PCBS\204D\SCH\5A204D.DSN	D3

Date: Thursday, November 19, 1998 Sheet 1 of 2

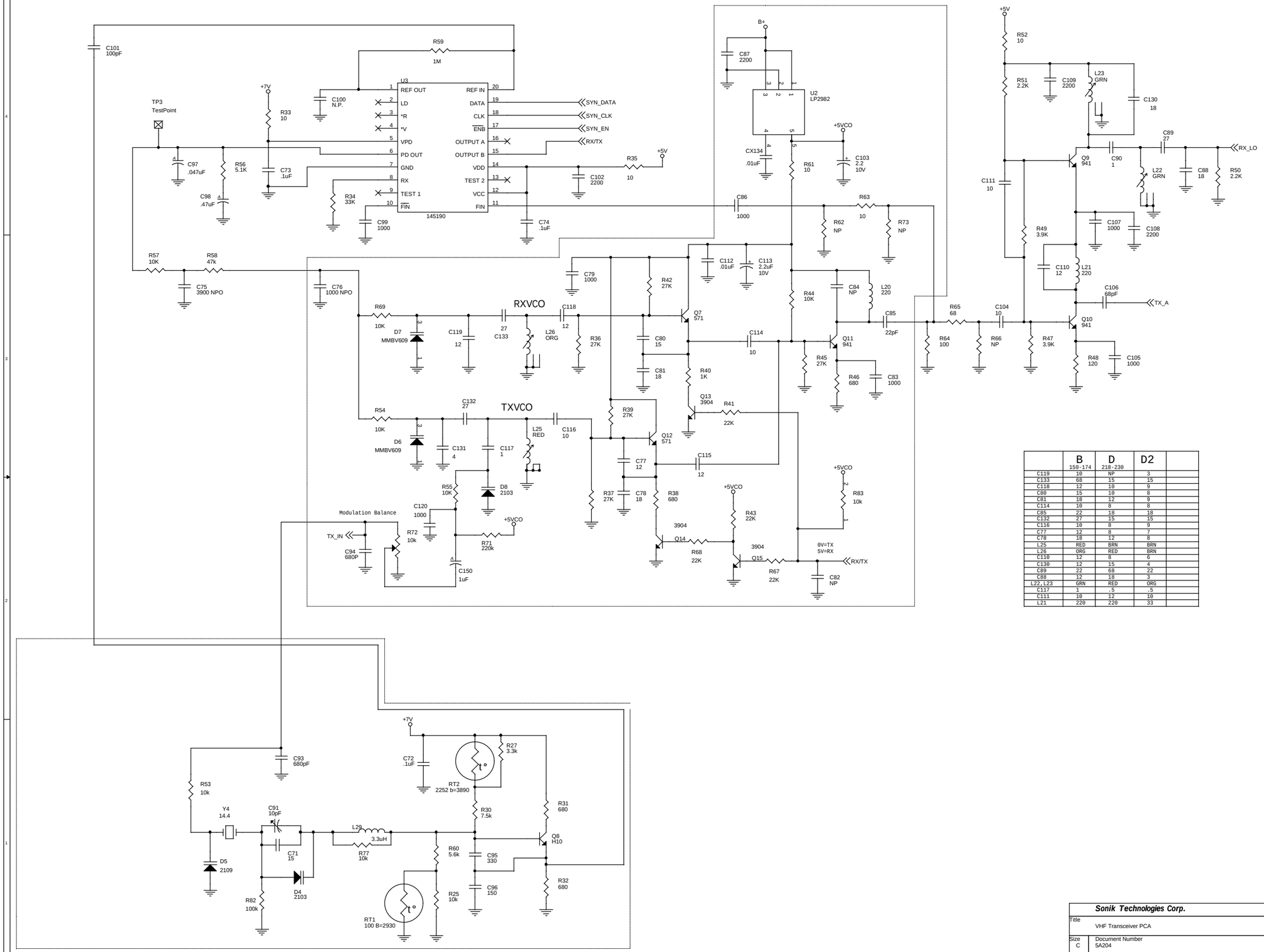

	B 150-174	D 218-230	D2	
C119	10	NP	3	
C133	68	15	15	
C118	12	10	9	
C80	15	10	8	
C81	18	12	9	
C114	10	8	8	
C85	22	18	18	
C132	27	15	15	
C116	10	8	9	
C77	12	8	7	
C78	18	12	8	
L25	RED	BRN	BRN	
L26	ORG	RED	BRN	
C110	12	8	6	
C130	12	15	4	
C89	22	68	22	
C88	12	18	3	
L22,L23	GRN	RED	ORG	
C117	1	.5	.5	
C111	10	12	10	
L21	220	220	33	

Sonik Technologies Corp.

Title: VHF Transceiver PCA

Size: C | Document Number: 5A204 | Rev: D3

Date: Thursday, November 19, 1998 | Sheet 2 of 2