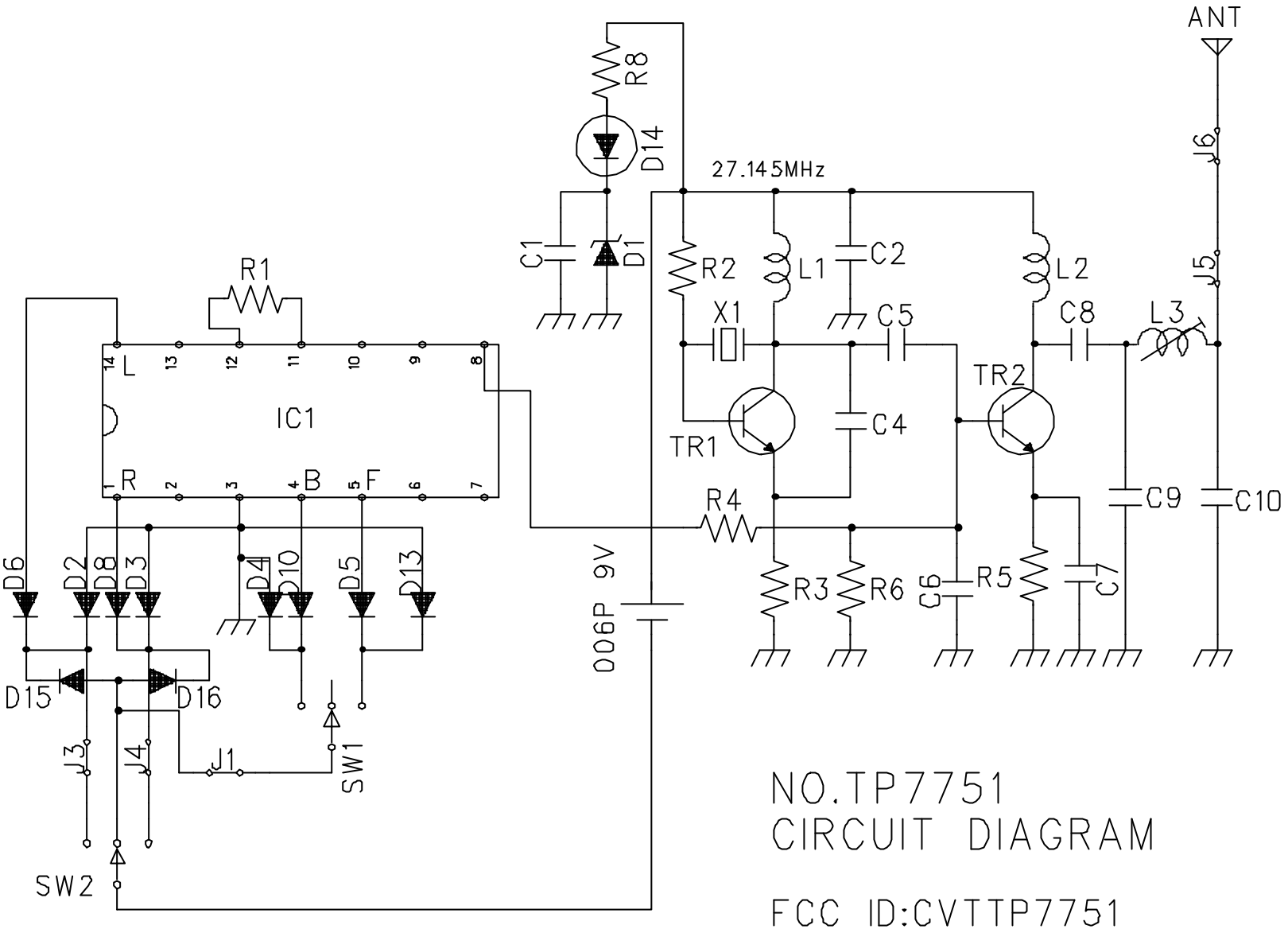

NO.TP7751
CIRCUIT DIAGRAM

FCC ID:CVTTP7751