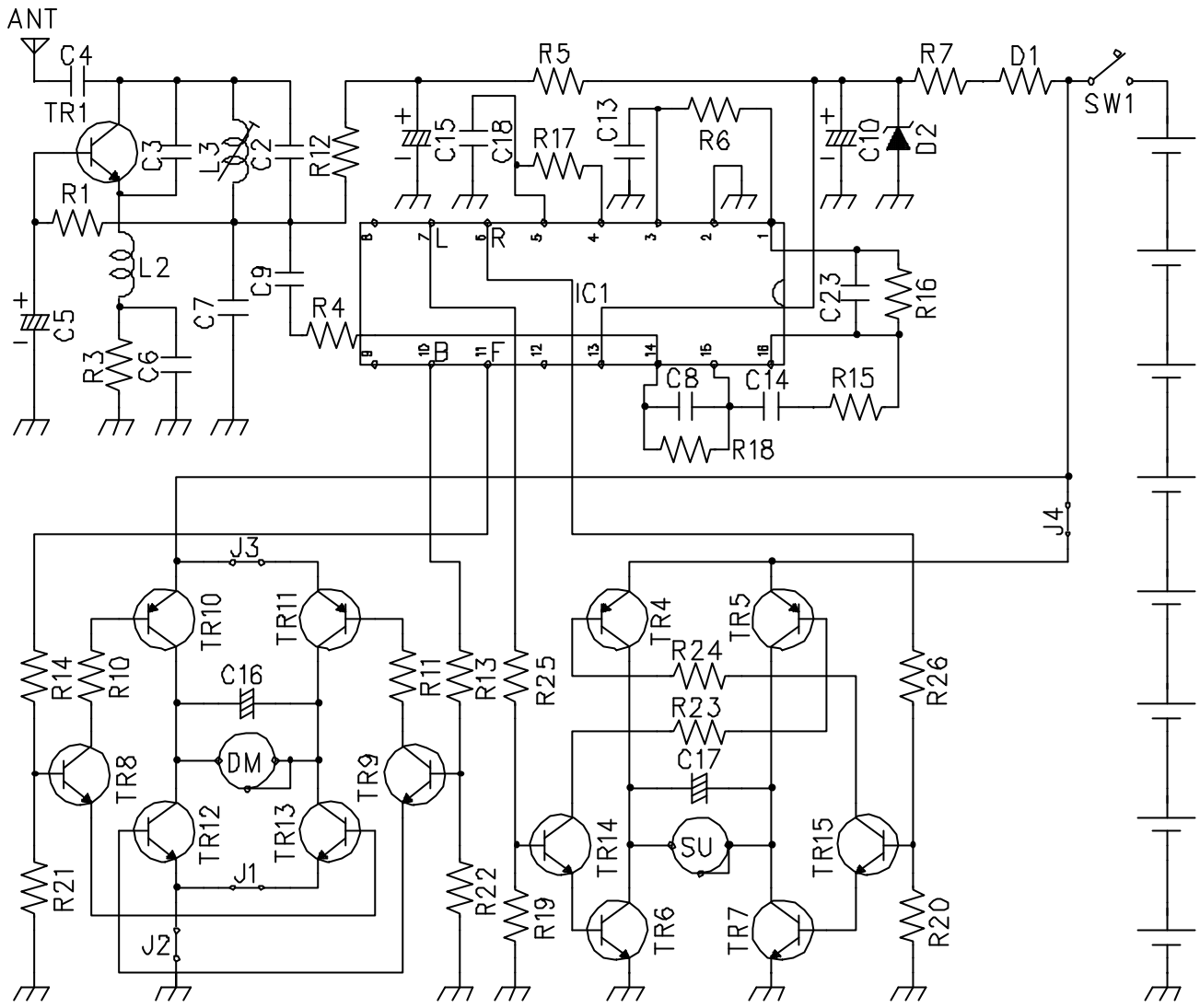

DM:DRIVING MOTOR SU:STEERING UNIT

NO.RP7301G CIRCUIT DIAGRAM FCC ID:CVTRP7301H