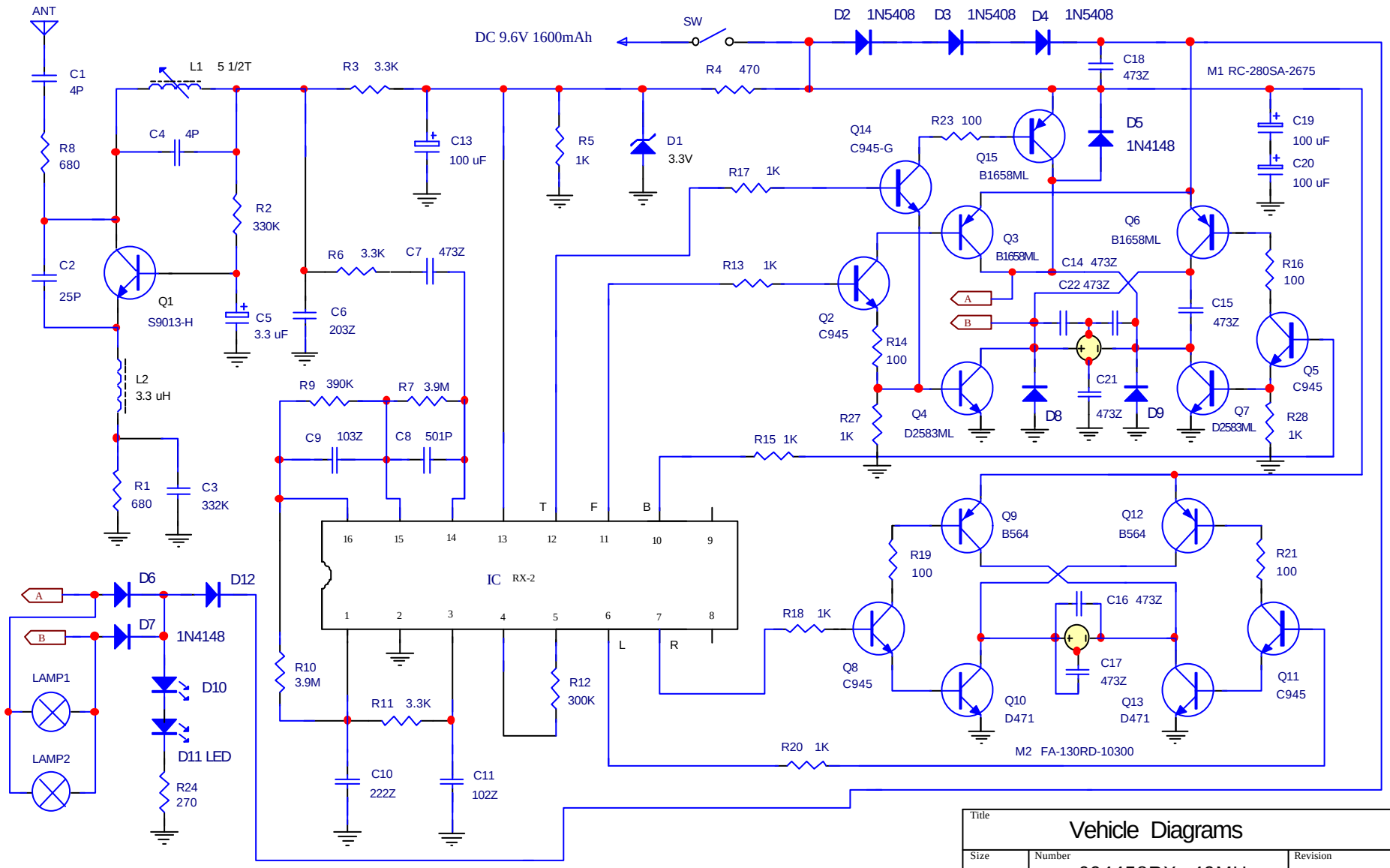

Title		
Vehicle Diagrams		
Size A4	Number 604458RX 49MHz	Revision
Date: 4-Jul-2006		Sheet of
File: E:\yanghao\BlockSchPcb.ddb		Drawn By: