EXHIBIT 6

SCHEMATICS/BLOCK DIAGRAM

REVISIONS			
LTR		DATE	APPVD

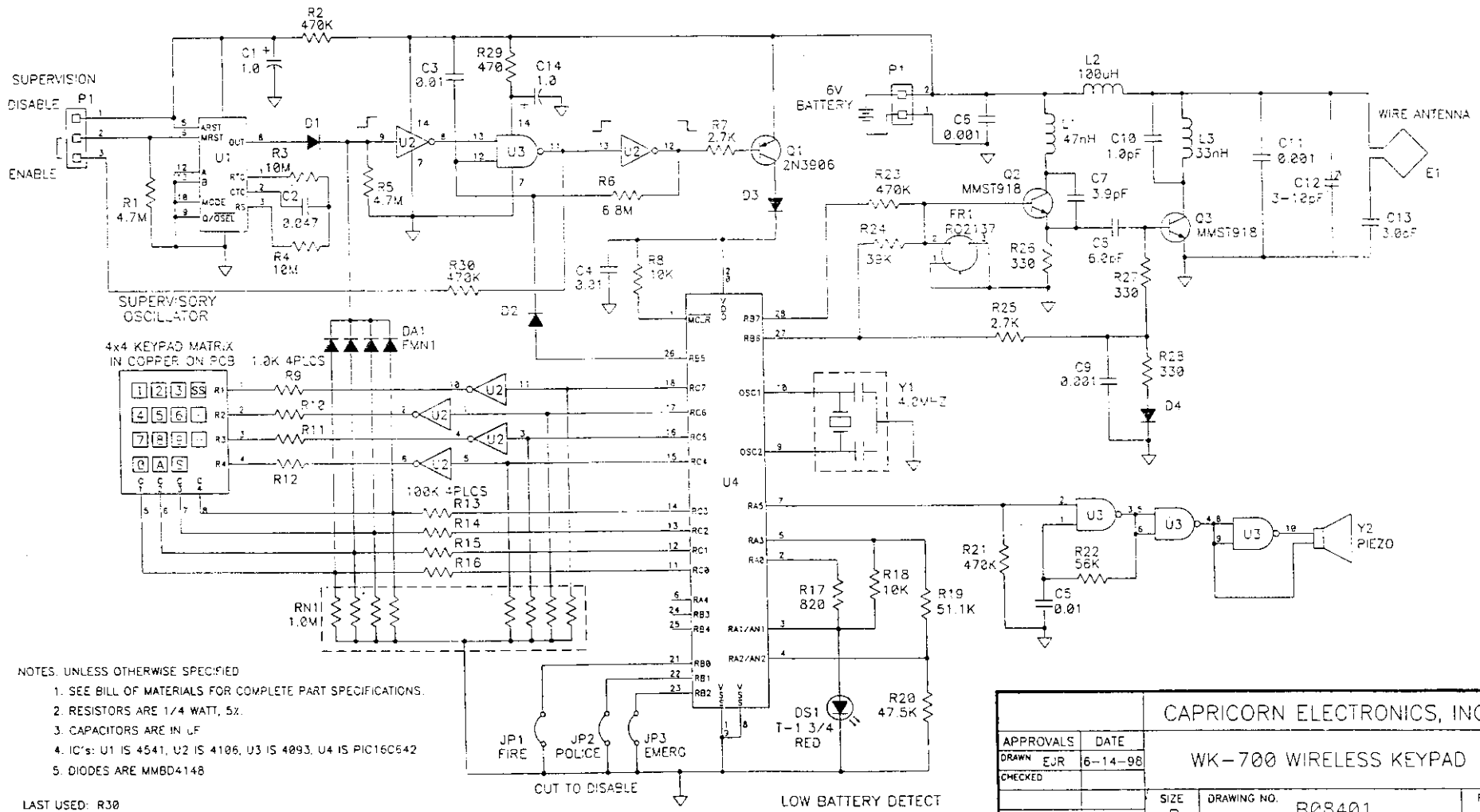

NOTES. UNLESS OTHERWISE SPECIFIED

1. SEE BILL OF MATERIALS FOR COMPLETE PART SPECIFICATIONS.
2. RESISTORS ARE 1/4 WATT, 5%.
3. CAPACITORS ARE IN uF
4. IC's: U1 IS 4541, U2 IS 4106, U3 IS 4093, U4 IS PIC16C642
5. DIODES ARE MMBD4148

LAST USED: R30
C14

		CAPRICORN ELECTRONICS, INC.
APPROVALS	DATE	
DRAWN EJR	6-14-98	WK-700 WIRELESS KEYPAD
CHECKED		
		SIZE B / DRAWING NO. B08401 / REV
		FILENAME: WK700.S01 / SHEET 1 OF 1