Circuit Diagram for DVD-ROM DRIVE MODEL SD-M1502

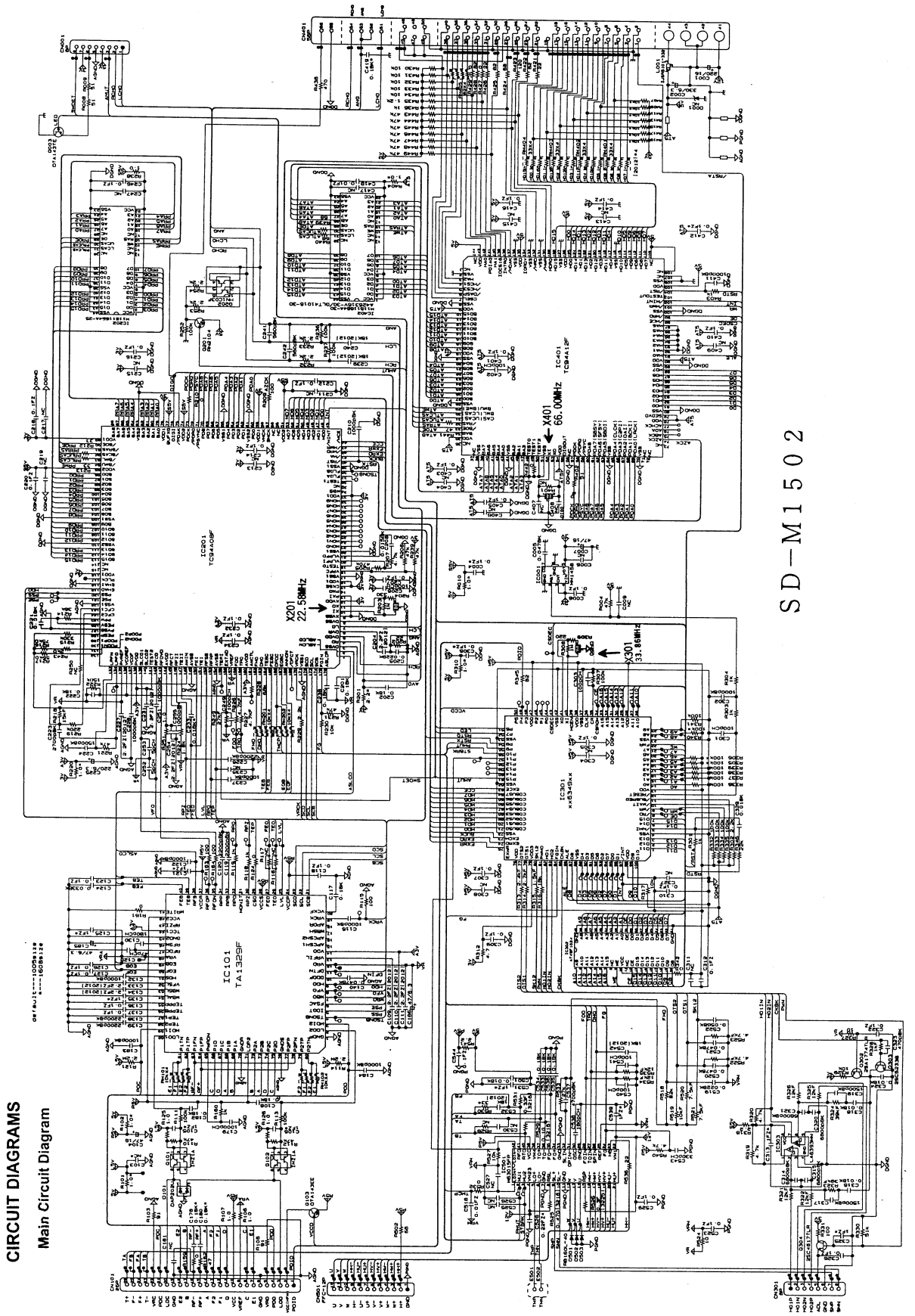

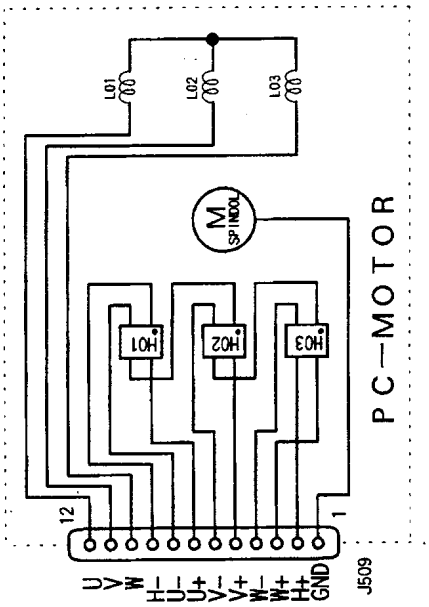

Spindle Motor

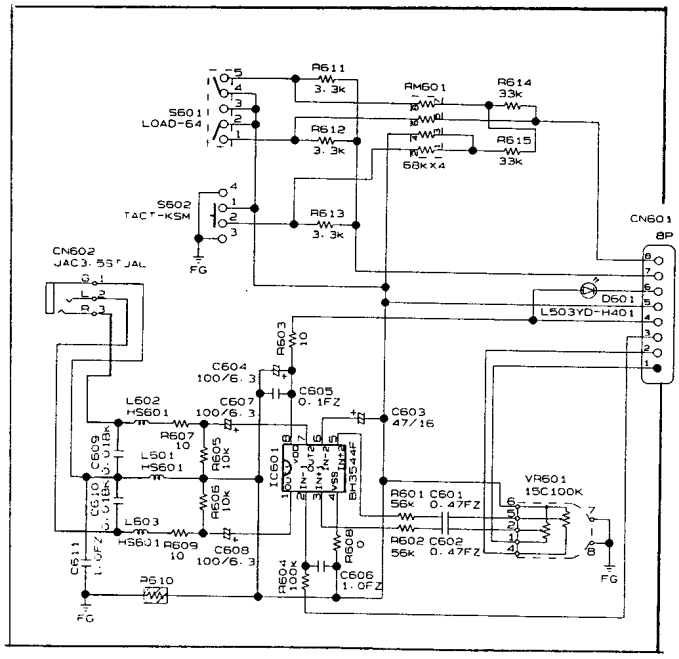

Front -PC

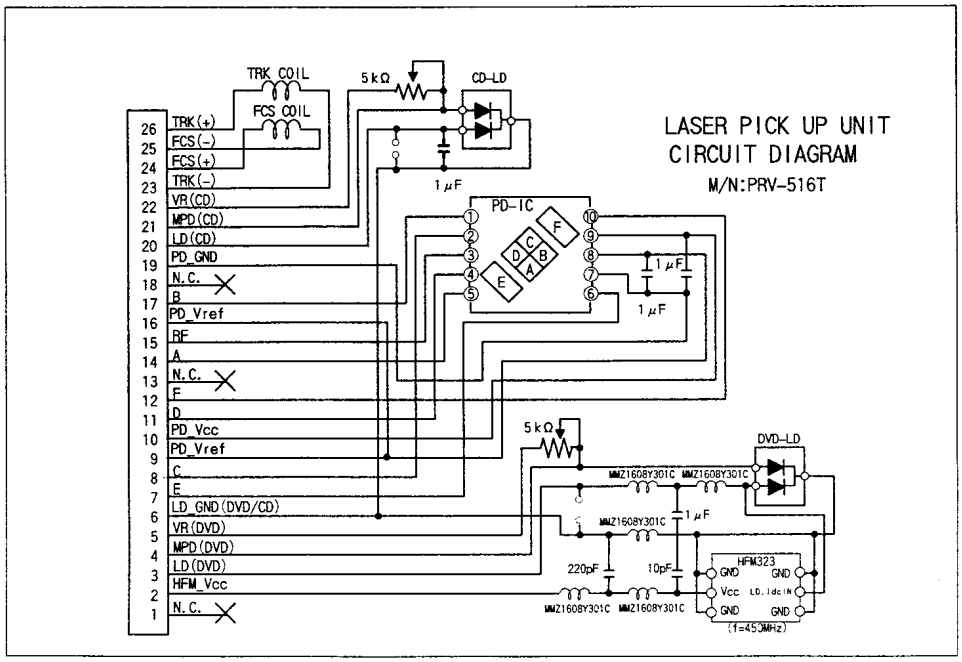

Laser Module