REVISION RECORD			
LTR	ECO NO:	APPROVED:	DATE:

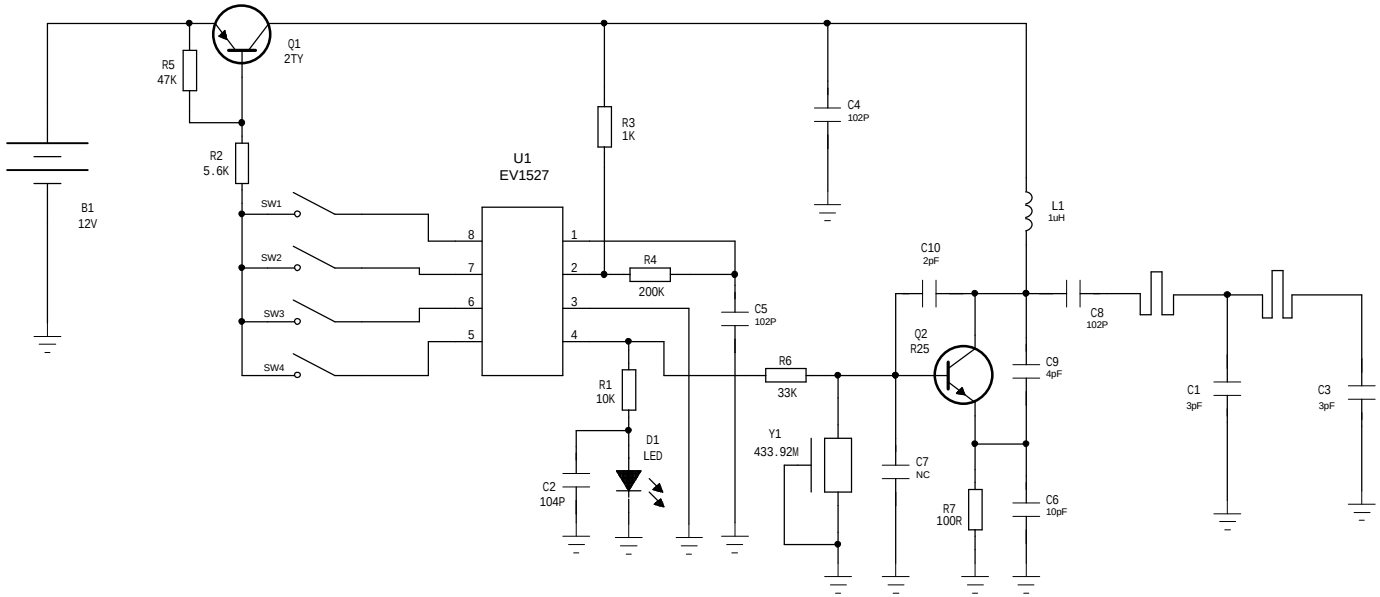

DRAWN: HZW	DATED: 2010.3.8	COMPANY:	
CHECKED: YC	DATED: 2010.3.9	TITLE: TA25(433.92Mhz)	
QUALITY CONTROL: YC	DATED: 2010.3.9	CODE:	SIZE: B / DRAWING NO: CZB20100306 / REV: A
RELEASED: YZ	DATED: 2010.3.9	SCALE:	SHEET: 1 OF 1

PDF 文件使用 "pdfFactory" 试用版本创建 www.fineprint.cn