REV	DESCRIPTION	APPROVED	DATE
2	ECN32993	RB.	11-02-06
3	CORR. BPCS BOM.	RB.	11-03-06
4	ECN33331 "A" ESW1060L4.	RB.	01-31-07

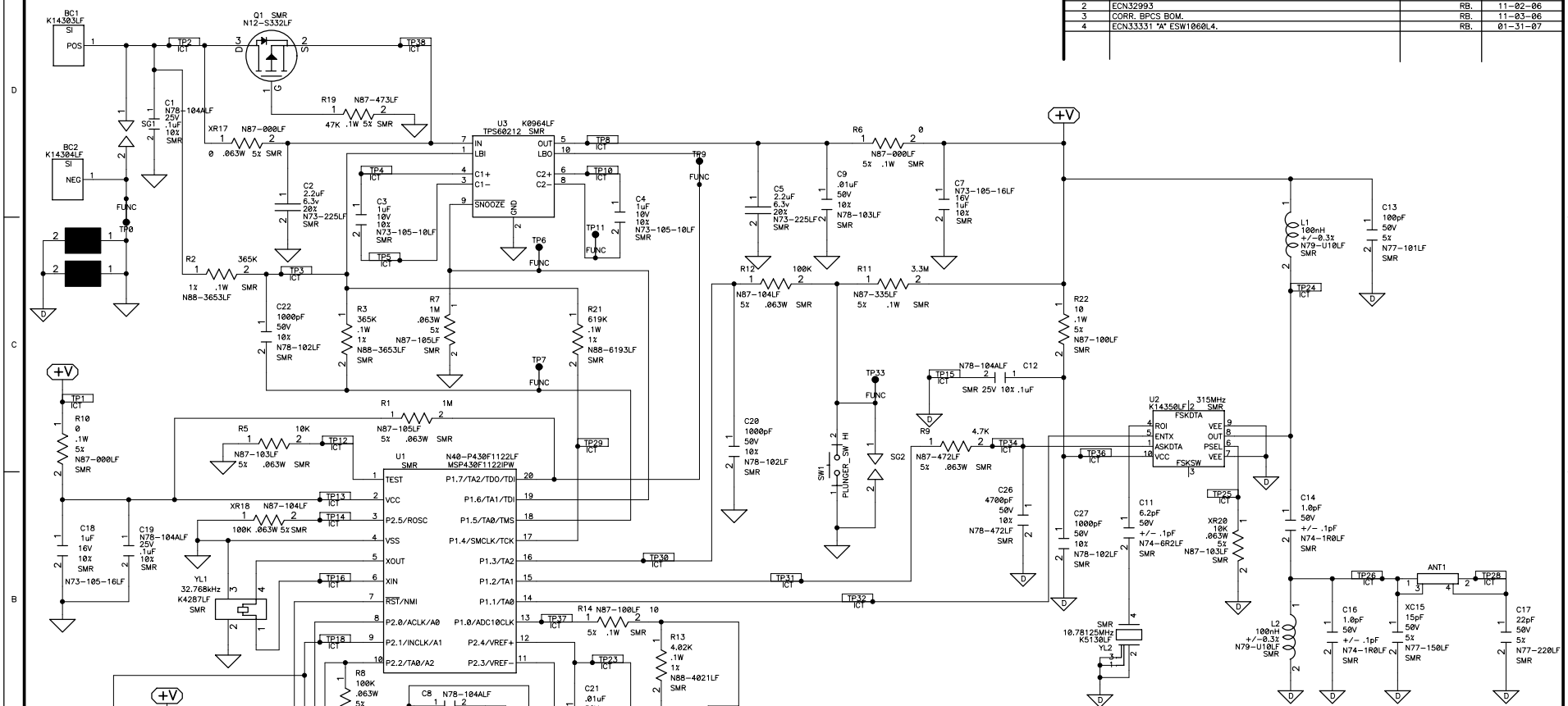

APPROVALS	DATE
PROJECT ENG. KEN ESKILDSEN	
ELECTRICAL ENG. LEWIN EDWARDS	
MFG. ENG. PETE SACHS	
IN CIRCUIT TEST ENGR. M.SIDDIQ	
FUNCTIONAL TEST ENGR. J.SWANSON	
CREATED BY: G.MANCUSO/LAS	

Honeywell
165 EILEEN WAY
SYOSSET, NEW YORK 11791

PCB (REF)	K14253V1 REV.A	
TITLE	SA5870API_ MEL TRANSMITTER	NON LF
DRAWING NUMBER	SA5870API	
COMPUTER FILE NAME	SA5870API.SCH	
DATE: 4/26/06	SHEET 1 OF 1	