ASSY REV	DESCRIPTION	APPROVED	DATE
A	PRODUCTION RELEASE DMM		1-28-2000

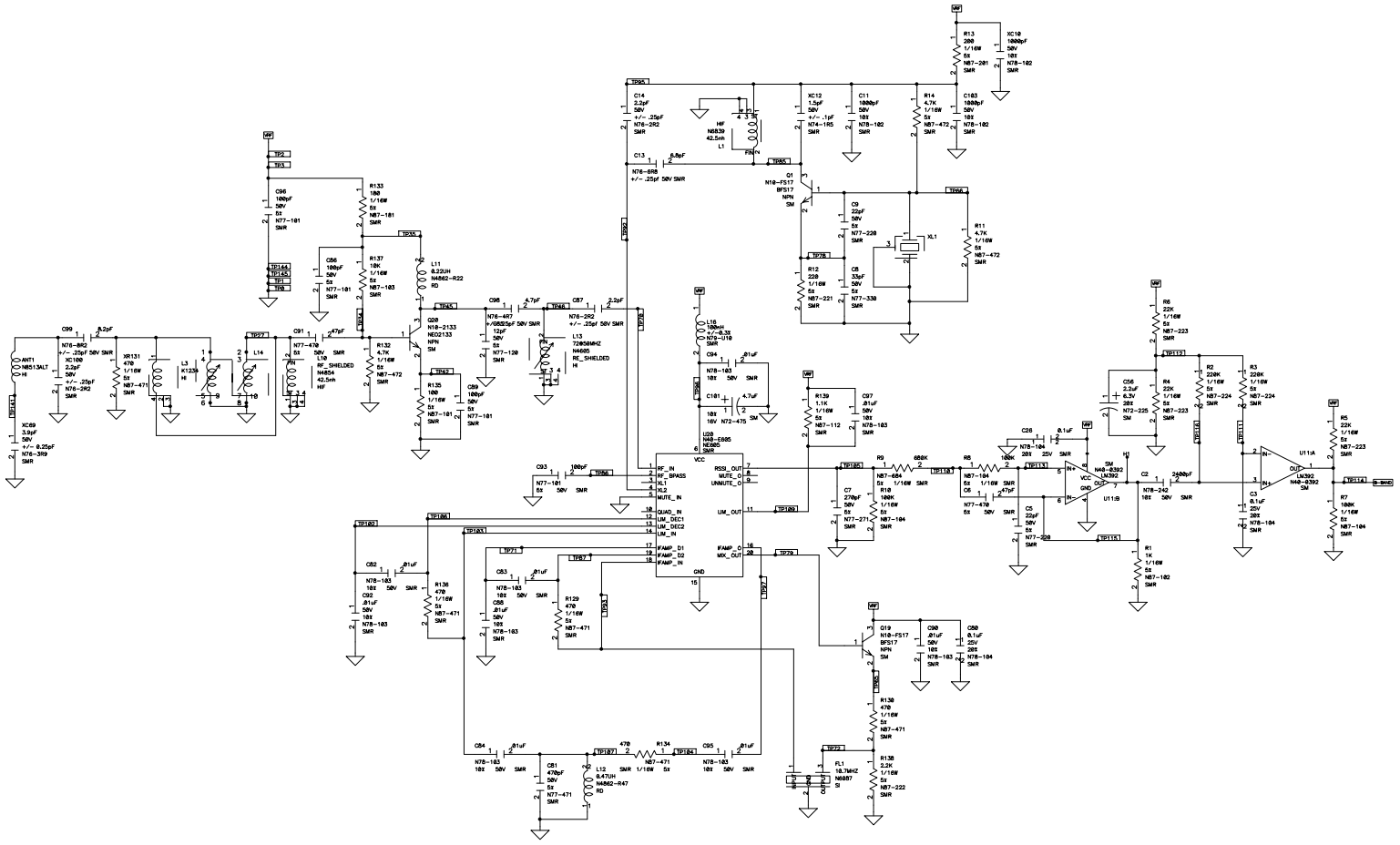

NOTE: "X" COMPONENTS NOT STUFFED IN PCB.

ASSEMBLIES	LAST USED		DO NOT USE	APPROVALS	DATE
SA	R	SW		DRAWN BY AJEET TEMBURNI	06 04 96
	C	W		CHECKED BY	
	CR	XL			
	Q	L		APPROVED BY	
	U	TP			
	FL	Z			
	TB				

ADEMCO
165 EILEEN WAY
SYOSSET, NEW YORK 11791

PCB (REF) N8319V3

TITLE MASTER SCHEMATIC PRODUCT NAME

DRAWING NUMBER SA5839EU-1

COMPUTER FILE NAME 5839EU-1.SCH

DATE: 06-04-98 SHEET 1 OF 2