ASSY REV	DESCRIPTION	APPROVED	DATE
N	ECN15830 CHN. PCB TO V1/A , C19 WAS 3.9PF, C17 WAS 100PF *A* Q9, R35 AND R36	11/16/98	
P	ECN17590 XL2 WAS N5244 *D* P9429	12/01/98	
R	ECN28427 N80-104 CHN. TO N80-104LF.	03-28-05	RB.

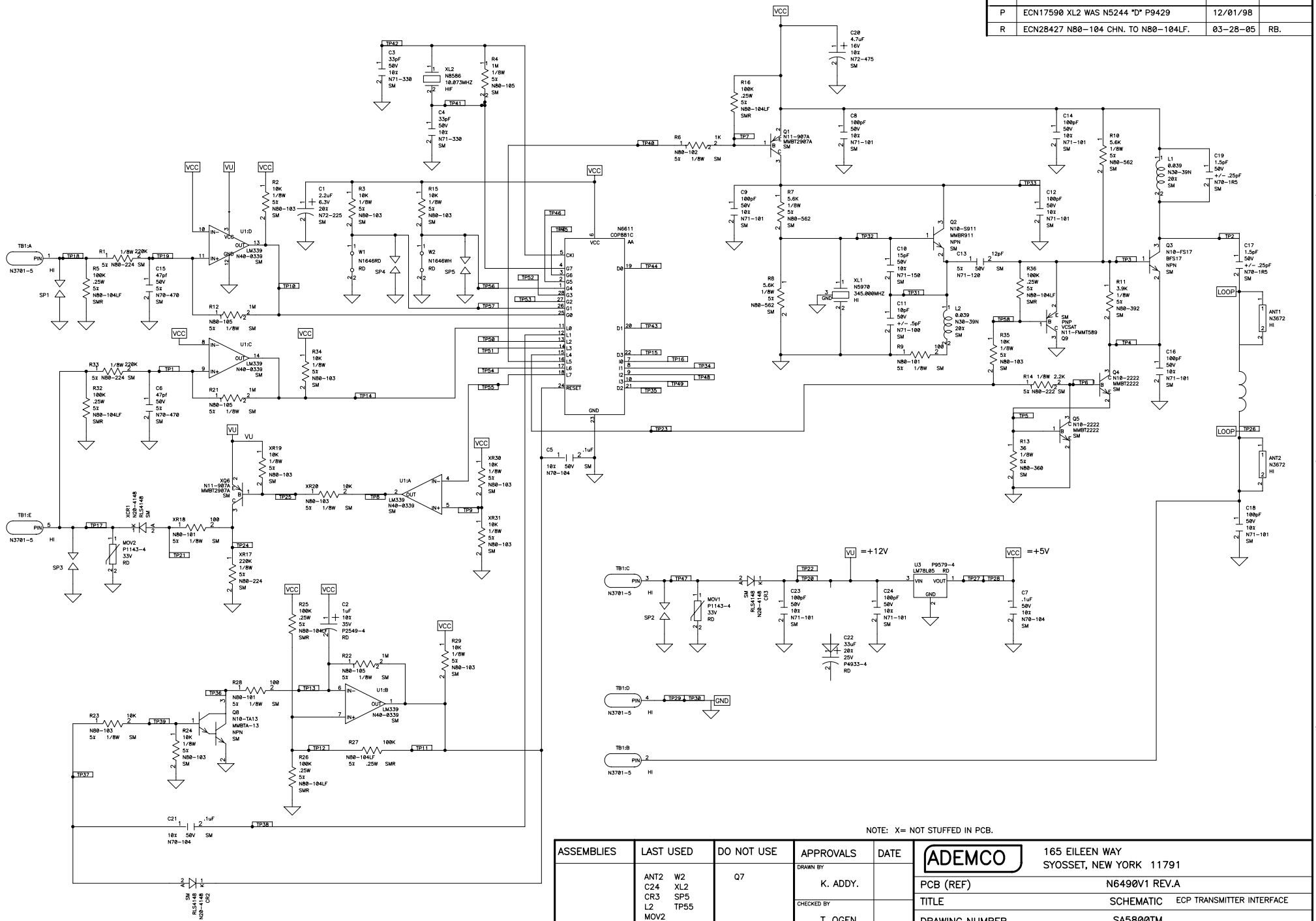

NOTE: X= NOT STUFFED IN PCB.

ASSEMBLIES	LAST USED	DO NOT USE	APPROVALS	DATE
	ANT2 W2 C24 XL2 CR3 SP5 L2 TP55 MOV2 Q8 R34 TB1 U3	Q7	DRAWN BY K. ADDY. CHECKED BY T. OGEN. APPROVED BY	

ADEMCO
165 EILEEN WAY
SYOSSET, NEW YORK 11791

PCB (REF)	N6490V1 REV.A
TITLE	SCHEMATIC ECP TRANSMITTER INTERFACE
DRAWING NUMBER	SA5800TM
COMPUTER FILE NAME	5800TM
DATE: 5-11-92	SHEET 1 OF 1